conga-SBM^3

congatec Smart Battery Manager Module

User's Guide

Revision 1.2

Revision History

Revision	Date (yyyy.mm.dd)	Author	Changes
1.0	2012.11.06	AEM	• Official release
1.1	2013.07.22	AEM	• Updated section 4.1.1 “Bat Task (small battery task) • Highlighted the essential registers used by ACPI control methods to determine the battery and information in section 7.3.1 “Control Registers” • Added cable description in section 7.2 “ Electrical Connections”
1.2	2014.01.13	AEM	• Changed smart battery cell count resistors R96, R71 and R73 for revision X.1 to R99, R100 and R102 for revision A.x in section 5.1.1.1 “Input Voltage Threshold”. • Updated sections 5.1.2.1 “Adapter Limiting” and 5.1.2.3 “Short-Circuit Protection”.

Preface

This user's guide provides information about the functions, firmware structure, customization and specifications of the conga-SBM^3 module.

Disclaimer

The information contained within this user's guide, including but not limited to any product specification, is subject to change without notice.

congatec AG provides no warranty with regard to this user's guide or any other information contained herein and hereby expressly disclaims any implied warranties of merchantability or fitness for any particular purpose with regard to any of the foregoing. congatec AG assumes no liability for any damages incurred directly or indirectly from any technical or typographical errors or omissions contained herein or for discrepancies between the product and the user's guide. In no event shall congatec AG be liable for any incidental, consequential, special, or exemplary damages, whether based on tort, contract or otherwise, arising out of or in connection with this user's guide or any other information contained herein or the use thereof.

Intended Audience

This user's guide is intended for technically qualified personnel. It is not intended for general audiences.

Symbols

The following symbols are used in this user's guide:

Warning

Warnings indicate conditions that, if not observed, can cause personal injury.

Caution

Cautions warn the user about how to prevent damage to hardware or loss of data.

Note

Notes call attention to important information that should be observed.

Terminology

Term	Description
GB	Gigabyte (1,073,741,824 bytes)
GHz	Gigahertz (one billion hertz)
kB	Kilobyte (1024 bytes)
MB	Megabyte (1,048,576 bytes)
Mbit	Megabit (1,048,576 bits)
kHz	Kilohertz (one thousand hertz)
MHz	Megahertz (one million hertz)
I2C bus	Inter-Integrated Circuit Bus
SMBus	System Management Bus
I	Input Signal
CRC	Cyclic Redundancy Code
PSU	Power Supply Unit
O	Output Signal
PU	Pull Up Resistor
r	Read Operation
w	Write Operation
N.C.	Not connected
N.A.	Not available
LDO	Low dropout regulator
TBD	To be determined

Copyright Notice

Copyright © 2012, congatec AG. All rights reserved. All text, pictures and graphics are protected by copyrights. No copying is permitted without written permission from congatec AG.

congatec AG has made every attempt to ensure that the information in this document is accurate yet the information contained within is supplied “as-is

Trademarks

Product names, logos, brands, and other trademarks featured or referred to within this user's guide, or the congatec website, are the property of their respective trademark holders. These trademark holders are not affiliated with congatec AG, our products, or our website.

Warranty

congatec AG makes no representation, warranty or guaranty, express or implied regarding the products except its standard form of limited warranty ("Limited Warranty") per the terms and conditions of the congatec entity, which the product is delivered from. These terms and conditions can be downloaded from www.congatec.com. congatec AG may in its sole discretion modify its Limited Warranty at any time and from time to time.

The products may include software. Use of the software is subject to the terms and conditions set out in the respective owner's license agreements, which are available at www.congatec.com and/or upon request.

Beginning on the date of shipment to its direct customer and continuing for the published warranty period, congatec AG represents that the products are new and warrants that each product failing to function properly under normal use, due to a defect in materials or workmanship or due to non conformance to the agreed upon specifications, will be repaired or exchanged, at congatec's option and expense.

Customer will obtain a Return Material Authorization ("RMA") number from congatec AG prior to returning the non conforming product freight prepaid. congatec AG will pay for transporting the repaired or exchanged product to the customer.

Repaired, replaced or exchanged product will be warranted for the repair warranty period in effect as of the date the repaired, exchanged or replaced product is shipped by congatec, or the remainder of the original warranty, whichever is longer. This Limited Warranty extends to congatec's direct customer only and is not assignable or transferable.

Except as set forth in writing in the Limited Warranty, congatec makes no performance representations, warranties, or guarantees, either express or implied, oral or written, with respect to the products, including without limitation any implied warranty (a) of merchantability, (b) of fitness for a particular purpose, or (c) arising from course of performance, course of dealing, or usage of trade.

congatec AG shall in no event be liable to the end user for collateral or consequential damages of any kind. congatec shall not otherwise be liable for loss, damage or expense directly or indirectly arising from the use of the product or from any other cause. The sole and exclusive remedy against congatec, whether a claim sound in contract, warranty, tort or any other legal theory, shall be repair or replacement of the product only.

Electrostatic Sensitive Device

All congatec AG products are electrostatic sensitive devices and are packaged accordingly. Do not open or handle a congatec AG product except at an electrostatic-free workstation. Additionally, do not ship or store congatec AG products near strong electrostatic, electromagnetic, magnetic, or radioactive fields unless the device is contained within its original manufacturer's packaging. Be aware that failure to comply with these guidelines will void the congatec AG Limited Warranty.

Lead-Free Designs (RoHS)

All congatec AG designs are created from lead-free components and are completely RoHS compliant.

Certification

congatec AG is certified to DIN EN ISO 9001 standard.

Technical Support

congatec AG technicians and engineers are committed to providing the best possible technical support for our customers so that our products can be easily used and implemented. We request that you first visit our website at www.congatec.com for the latest documentation, utilities and drivers, which have been made available to assist you. If you still require assistance after visiting our website then contact our technical support department by email at support@congatec.com

Contents

1 General Information 10
1.1 Safety Instructions 10
1.2 Service and Maintenance 10
1.3 Disposal Consideration 11
1.4 Battery Kit Firmware Concept 11
1.5 conga-SBM³ Options Information 11
2 Specifications 13
2.1 Feature List 13
2.2 Mechanical Dimensions 16
2.3 Supported Operating Systems 17
2.4 Supply Voltage Standard Power 17
2.4.1 Electrical Characteristics 18
2.5 Output power rails 18
2.6 Environmental Specifications 18
3 Block Diagram 19
4 Functional Descriptions 20
4.1 Main Firmware Tasks 21
4.1.1 BAT Task (smart battery task) 21
4.1.2 BTN Task (power button task) 22
4.1.3 LED Task (led on/off/blink functionality) 22
4.1.4 SND Task (buzzer functionality) 22
4.1.5 CHR Task (charger task) 23
4.1.6 SBM Task (smart battery manager task) 26
4.1.7 Simplified State Diagram 27
4.2 Firmware Support Modules 28
4.2.1 ADC Module (input voltage reading) 28
4.2.2 GPIO Module (GPIO support functions) 28
4.2.3 PWR Module (handling of all power control signals) 28
4.2.4 SCH Module (preemptive multitasking scheduler) 29
4.2.5 SPI Module (SPI communication module) 29
4.2.6 I2C1 Module (I2C communication module master/slave) 29
4.2.7 I2CS, I2CS1 Module (I2C communication module master/slave) 30
4.2.8 Flash Module 30
4.2.9 Main Function 30
4.2.10 WDT Module 30
5 conga-SBM³ Customization 31
5.1 Hardware Customization 31
5.1.1 Voltage Adjustment 31
5.1.1.1 Input Voltage Threshold 31
5.1.1.2 LOPWR 32
5.1.2 Current Adjustment 32
5.1.2.1 Adapter Limiting 32
5.1.2.2 Maximum Charge Current 32
5.1.2.3 Short-Circuit Protection 33
5.2 Firmware Customization 33
5.2.1 Voltage Adjustment 33
5.2.1.1 Input Voltage Threshold 33
5.2.1.2 Smart Battery Voltage and Current Limits 34
5.2.1.3 Depleted Voltage and Current Change For Other Smart Batteries 34
5.2.1.4 New Charge Current Calculation 35
6 Signal Descriptions and Pinout Tables 36
6.1 SBM³ Connector Pinouts 37
6.1.1 JTAG Connector 38
6.1.2 DC-Input (+3V Li Battery) 39
6.1.3 Power Button 39
6.1.4 Power Management Connector 40
6.1.5 DC-IN Jack Input 40
6.1.6 DC-IN Input 41
6.1.7 PSU Output 41
6.1.8 BAT1 Connector 42
6.1.9 BAT2 Connector 42
6.2 conga-SBM³ connections with congatec Boards 43
6.2.1 conga-SBM³ connection with COM Express modules 43
6.2.2 conga-SBM³ Connection with Qseven modules 44
7 Interface Specification 45

7.1 Introduction 45
7.2 Electrical Connections 46
7.2.1 COM Express™ Electrical Connections 46
7.2.1.1 conga-SBM³ connection with CMCB mini-carrier board 47
7.2.1.2 conga-SBM³ connection with CEVAL Evaluation Board 48
7.2.1.3 conga-SBM³ connection with TEVAL Evaluation Board 49
7.2.2 QSeven™ Electrical Connections 51
7.2.2.1 conga-SBM³ connection with QMCB mini-carrier board 52
7.2.2.2 conga-SBM³ connection with QEVA Evaluation Board 53
7.3 SBSM Control Register 54
7.3.1 Control Registers 54
7.3.2 OptionalMfgCfgReg2 Register (0x3E) 56

8 Industry Specifications 57

List of Tables

Table 1 Firmware Feature Summary 13
Table 2 Hardware Feature Summary..... 15
Table 3 Electrical Characteristics Overview..... 18
Table 4 Signal Tables Terminology Descriptions 36
Table 5 conga-SBM³ X4 Connector (Control Cable)..... 43
Table 6 conga-SBM³ X7 Connector (Power Cable) 43
Table 7 conga-SBM³ X4 Connector (Control Cable)..... 44
Table 8 conga-SBM³ X7 Connector (Power Cable) 44
Table 9 Signal Descriptions (COM Express Connection) 46
Table 10 Signal Descriptions (Qseven Connection) 51
Table 11 Control Register description..... 54
Table 12 Optional Register 56

1 General Information

1.1 Safety Instructions

This safety guide provides important instructions that should be followed during the installation and maintenance of the conga-SBM^3.

Precautions:

- Do not short the external contacts on a battery.
- Do not disassemble or deform the battery.
- Avoid exposing the battery to excessive shock or vibration.
- Do not use a degraded or damaged battery.
- Battery must be charged with approved charger only. Never use a modified or damaged charger.
- Keep out of reach of children.
- Do not leave batteries unused for extended periods of time, either in product or in storage. When the batteries have not been used for six months, check the charge status and charge or dispose of the battery appropriately.
- Store in a cool, dry and well ventilated area. Refer to section 2.6 for operating and storage temperatures.

Warning

Incorrect handling of Li-Ion battery poses a safety hazard. Use caution when dealing with design areas that may adversely impact safety.

1.2 Service and Maintenance

Service, maintenance or repair of the conga-SBM^3 must be performed by qualified and authorized service personnel only. Do not open or repair the equipment on your own. Considerable danger may occur from unauthorized opening or improper repair of the conga-SBM^3.

If there are service tasks required, contact your congatec sales representative.

1.3 Disposal Consideration

The lithium-Ion batteries in the conga-SBM^3 kit are subject to disposal and recycling regulations in various countries. Ensure that the applicable regulations are followed before disposing of any battery.

Do not expose the battery to, or dispose of the battery in fire or water. Place only discharged batteries in a battery collection container. Use electrical tape or other approved covering over the battery connection points to prevent short circuits.

1.4 Battery Kit Firmware Concept

The battery kit provides an interface between smart batteries and any computer platform according to the ACPI standard. This version of battery kit is focused on Qseven and COM Express CPU modules.

A standardized library from the Cortex Microcontroller Software Interface Standard CMSIS Version 1.30 was used for programming the conga-SBM^3 and it is intended to be compliant with future MISRA programming language standards.

The firmware is based on preemptive multitasking. It is composed of tasks and supported modules. Tasks are scheduled to be executed in given time frames and supported modules are used as drivers for all STM32 peripheries.

Note

Only 2.5" hard drives can be used when connecting conga-SBM^3 to congatec mobility carrier boards. This is because the mobility carrier boards do not provide +12V power rail. To use 3.5" hard drives, the +12V power rail must be directly connected to conga-SBM^3 output.

1.5 conga-SBM^3 Options Information

The conga-SBM^3 is currently available in two variants. The input and output voltages are shown below:

Part-No.	025482 (2-cell battery)
Input Voltage	Norminal 19V/4.7A
Output 1	+12V/3A
Output 2	+5V/4A
	+5Vsb/4A
Output 3	+3.3V/0.25A
Supported Battery	Smart Li-Ion Battery, 2-cells, 7.2V

Part-No.	025483 (4-cell battery)
Input Voltage	Norminal 19V/4.7A
Output 1	+12V/3A
Output 2	+5V/4A
	+5Vsb/4A
Output 3	+3.3V/0.25A
Supported Battery	Smart Li-Ion Battery, 4-cells, 14.4V

Note

The second output “Output 2” provides both +5V/4A and +5Vsb/4A output possibilities.

2 Specifications

2.1 Feature List

Table 1 Firmware Feature Summary

DC-IN Voltage	The firmware is able to read the input voltage and then decide what additional steps to take, e.g due to charging limitations or other decisions depending on DC-IN. The device can not be switched on when less than 8V DC-IN is present. Over-voltage above 30 volts results in the LTC1960 automatically switching off. In order to safely recover from this over-voltage protection state, all power must be removed from the conga-SBM³ battery kit.
All PSU Power Control	All PSUs are switched on and off properly in all power states to avoid back powering, thereby ensuring proper power transitions. Control signals to CPU module are open drain type to avoid back powering through signal lines.
LED Signaling	3x Status LED for charger (PWRON, Line, Charge). 5x Status LED for battery #1 (100%, 75%, 50%,25%,Empty). 5x Status LED for battery #2 (100%, 75%, 50%,25%,Empty). 3x LED for power rail status (+12V, +5V, +5Vsb).
Power Button	Power button to manually switch on/off the device. Valid timing for button press events are: 1) Very short press (< 400 ms) : When in deep discharge protection mode with battery connected, the conga-SBM³ shows only the remaining capacity of the battery on LEDs for about 2 seconds. The device then goes back to deep protection mode in order to save maximum battery power. With a very short press, the device shows the battery status without switching on. This does not dissipate the battery. 2) Short press time (> 400 ms): To switch on/off the device (running from DC-IN or battery). 3) Long press (> 10 seconds): To force the device to switch off, irrespective of the state it is in. A clean transition to G2 mode occurs.
Temperature sensor	The onboard I2C temperature sensor. This can be read even if the CPU module is in sleep or in off mode. It can also be used to decide in severe minus temperature, whether to continue to switch on the device or not. It is accessible from the CPU module via the I2C bus.
Battery charger	Dual / single phase smart battery charger support. 1) In sequential mode: The first battery can be considered as the main battery and the second one as a backup battery. In this mode, charging and discharging must be provided separately because of the different battery cell capacity or charging current. The second battery (considered as backup battery) is charged first. 2) Dual charging / discharging mode: Uses both smart batteries simultaneously for charging and discharging procedures. This mode does not over stress the smart batteries with discharge currents, thereby extending the battery life and running time of PC (up to +20%) due to half-size current taken from every battery in parallel mode.
Adapter Overload Protection	The charger has input adapter power overload protection. When full power is connected to the CPU module and carrier board, the charger helps to reduce the input current by reducing the charge current, in order to protect DC-IN adapter overload.
Power Path Selector	Three sources of power input exist. These are: • DC-IN, • Smart battery 1 (main battery), • Smart battery 2 (backup battery). The firmware can fully control the power source where the device is powered from. For example during condition cycle, the power is taken from the smart battery to provide full discharge and charge procedure even if the device is on DC-IN. When running on battery, the conga-SBM³ should determine the battery that will supply power to the device.
Beeper	A buzzer which can be used to signal either a switch on/off procedure or an error state. It can be used as longer tone sequences to distinguish the various status of the device.

Sleep Mode	The common sleep mode of any Qseven or COM Express module is supported by means of sensing of SUSC_S3# signal. The PWR_ON Led blinks. In sleep mode, the conga-SBM³ should monitor the remaining battery capacity. If low, the system must be in wake-up to enable the OS to save open data files and properly switch off the device.
Condition Cycle	If any of the batteries require condition cycle, it means that the smart battery is internally confused about the amount of the remaining battery capacity. To resolve this, an internal update of the smart battery is required. This is done by fully discharging the smart battery and subsequently charging it fully. This procedure is only allowed when DC-IN is attached and the device is being powered by the battery. The condition cycle is provided for every battery separately. Dual mode is not allowed. If DC-IN is removed, the device transitions into normal battery powered mode. If DC-IN is reattached, then condition cycle restarts from the very beginning.
Low current mode	The only way to recover batteries that are depleted and in permanent protection mode with disabled output, is to set the charger into low current mode with pulsed high voltage. This wakes up the smart battery from the protection mode. This procedure is possible only in single battery mode. Dual mode is in this phase disabled.
Deep discharge protection	By means of a special circuitry, the conga-SBM³ controller can switch off itself to prevent smart batteries that are connected in G2 mode for a long time without DC-IN (9 secs by default) from deep discharge. This timeout can be set in firmware to any value. After the timeout has elapsed, the conga-SBM³ is switched off totally. This protection state can be seen when the LEDs indicating the remaining capacity of the batteries are off, even though the batteries are attached. This protection mode is necessary e.g. to protect the batteries from discharging when the device is stored on stock for longer time periods without DC-IN. The device can be switched on by pressing the power button. When the power button is pressed, the device powers itself and handles the power button event in two ways: 1) Very short power button press < 400 ms: the device shows the remaining battery capacity status for a short time and then goes into protection mode again 2) Standard button press > 400 ms: Switches the whole device on Auto-start feature is not supported in this mode while DC-IN is not present.
Autostart “Turn On”	If Power loss feature is set as “Turn On” in BIOS settings, the conga-SBM³ switches on the system as soon as the DC-IN power is present without any power button. This feature is not supported by battery plug-in by default. This ensures that when the battery is plugged into a system that is not being powered, the battery doesn’t automatically start powering the system, resulting in an immediate discharge. This feature can be supported if requested.
Configuration register r/w at 0x3D	Additional features such as enable/disable buzzer, dual charge/discharge can be enabled/disabled by writing into this register. Registers 0x3E, 0x3F can be used for additional data/feature settings. This data is stored in the last bank of STM32 flash memory. **NOTE:** *Due to the limited write cycles of flash memory, it is not recommended to misuse these registers for storing constantly changing run-time data.*

Table 2 Hardware Feature Summary

Input / Output	Connector / Accessiblity
Power IN	Option 1: 8 Vdc - 30 Vdc, Nominal: 19V / 4,7A. Option 2: 8Vdc - 30Vdc per external power connector / 10A.
CPU / Microcontroller	ARM® 32-bit microcontroller STM32F100R8T6.
PSU	1x back/boost DC-DC regulator with output +12V / 3A. 1x back regulator with output +5V / 4A. 1x LDO +3,3V always.
LED Signalling	3x status LED for charger (PWRON, Line, Charge). 5x status LED for battery #1 (100%, 75%, 50%,25%,Empty). 5x status LED for battery #2 (100%, 75%, 50%,25%,Empty). 3x LED for power rail status (+12V, +5V, +5Vsb).
Power Button	1x power button (to switch on/off the device manually). 1x option: 2 pin connector for external power button switch.
Temperature Sensor	1x on-board I2C temperature sensor.
Battery	2x standard smart battery (2S to 4S). By default, the conga-SBM³ battery kit is developed for 2S (two serial cells) smart batteries. For other cell counts (3S-4S), hardware and firmware modification is necessary to adopt exact set levels for the particular battery pack. Both smart batteries (Bat1 and Bat2) must always have the same cell count. The batteries are also directly connected to battery manager controller. **NOTE:** *You cannot use two batteries of varying cell count simultaneously.*
Battery Charger	1x dual/single phase smart battery charger with maximum charging current of 4A and input power overload protection.
Power Path Selector	1x fast power path selector as part of LTC1960. Three sources of power inputs : • DC-IN • Smart battery 1 (main battery) • Smart battery 2 (backup battery).
Beeper	1x buzzer to signal switch on/off and fault states.
Reverse Input Voltage Protection	Protection against unwanted reverse input voltage connection.
Connectivity	Option 1:- for Qseven platform (QMCB / QEVA cabling conversion). Option 2:- for COM Express platform (CMCB / CEVA cabling conversion [PSU +12V, +5V and +5Vsb power rails supported only]). Option 3:- customized wiring (T.B.D).

Caution

Do not connect smart batteries that are not 2S (2 serial cell) to the conga-SBM³ battery kit. This could damage the hardware or the batteries. conga-SBM³ battery kit is developed by default for 2S smart batteries. For the support of a different cell count other than 2S, the hardware and software must be modified to appropriate voltage level and parameters.

2.2 Mechanical Dimensions

- 90.0 mm x 80.0 mm
- Height approximately 13.7mm.

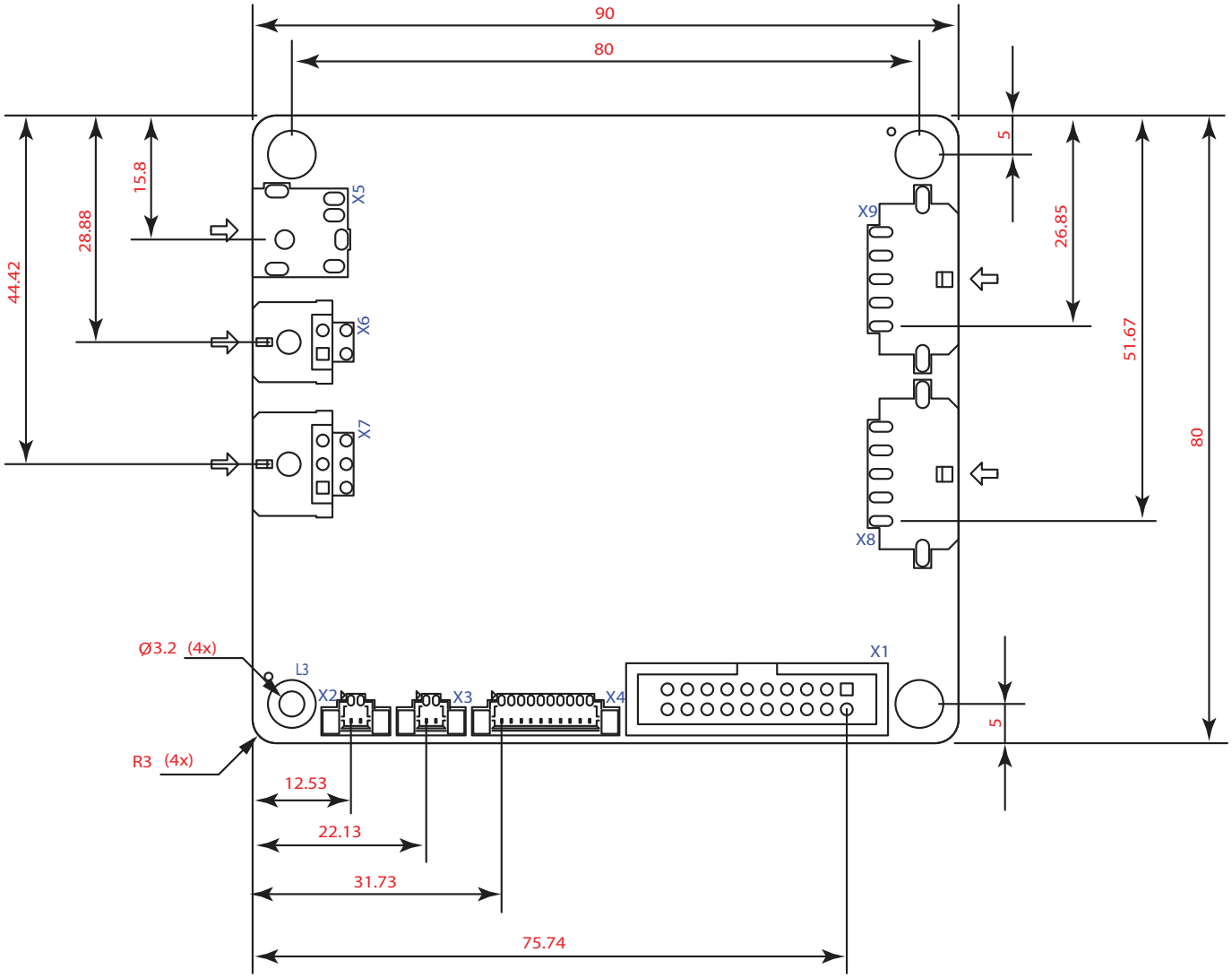

All dimensions in millimeter

2.3 Supported Operating Systems

The conga-SBM³ supports the following operating systems.

- Microsoft® Windows® 7
- Microsoft® Windows® XP
- Microsoft® Windows® Embedded Standard
- Linux

2.4 Supply Voltage Standard Power

- Wide input voltage range 8 - 30 Vdc
- Norminal 19V DC

The dynamic range shall not exceed the absolute minimum and maximum range (static range).

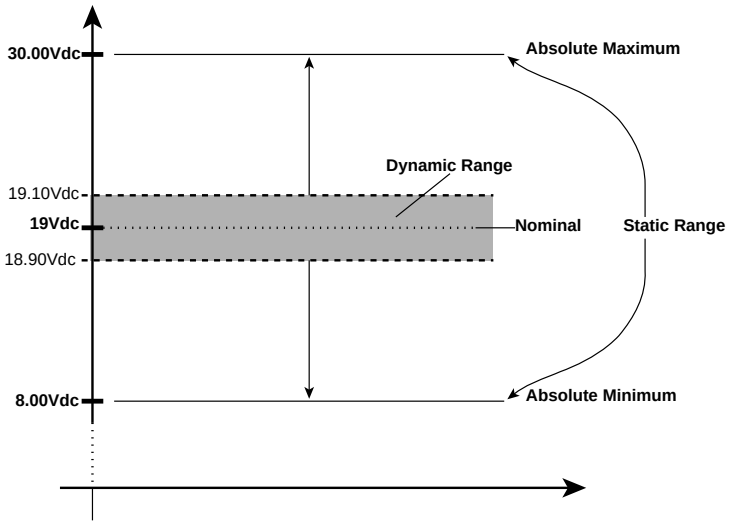

2.4.1 Electrical Characteristics

Table 3 Electrical Characteristics Overview

The following table provides an overview of the conga-SBM³ electrical characteristics.

INPUT			OUTPUT		
	AC- Adapter 19V nom.	Battery 2S - 4S	12V	5V / +5Vsb	Charger
Voltage range	8 - 30 V	6 - 16,8V	11.4 - 12.6V	4.75 - 5.25V	6 - 16.8V
Tolerance	±10%	-	±5%	±5%	-
Max. current	4.7A / 19V	*Ibat max. allowed	4A	4A	4A (could be increased)
Ripple voltage	-	-	170mV	60mV	200mV
Power	89W	*Ibat max. allowed	48W	20W	67W *(adapter over-current protection functionality activated).

2.5 Output power rails

- +12V
- +5V
- +5Vsb

2.6 Environmental Specifications

Temperature	Operation: 0° to 60°C	Storage: -20° to +80°C
Humidity	Operation: 10% to 90%	Storage: 5% to 95%

Caution

The above operating temperatures must be strictly adhered to at all times. Humidity specifications are for non-condensing conditions.

It is the responsibility of the operator to ensure that all components found on the module operate within the component manufacturer's specified temperature range.

Ensure adequate air flow when operating conga-SBM³ in an enclosed space.

3 Block Diagram

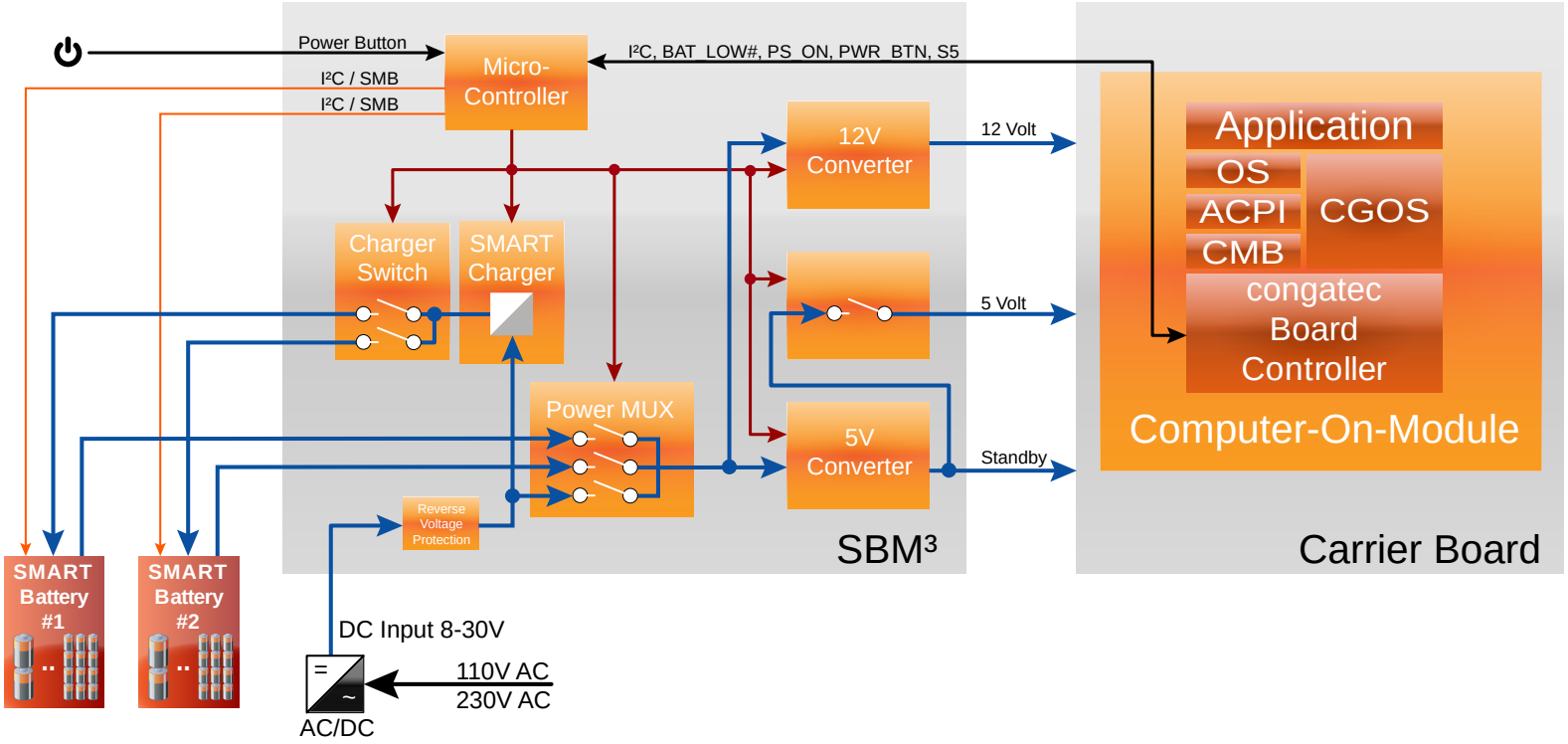

4 Functional Descriptions

Functional Block Diagram

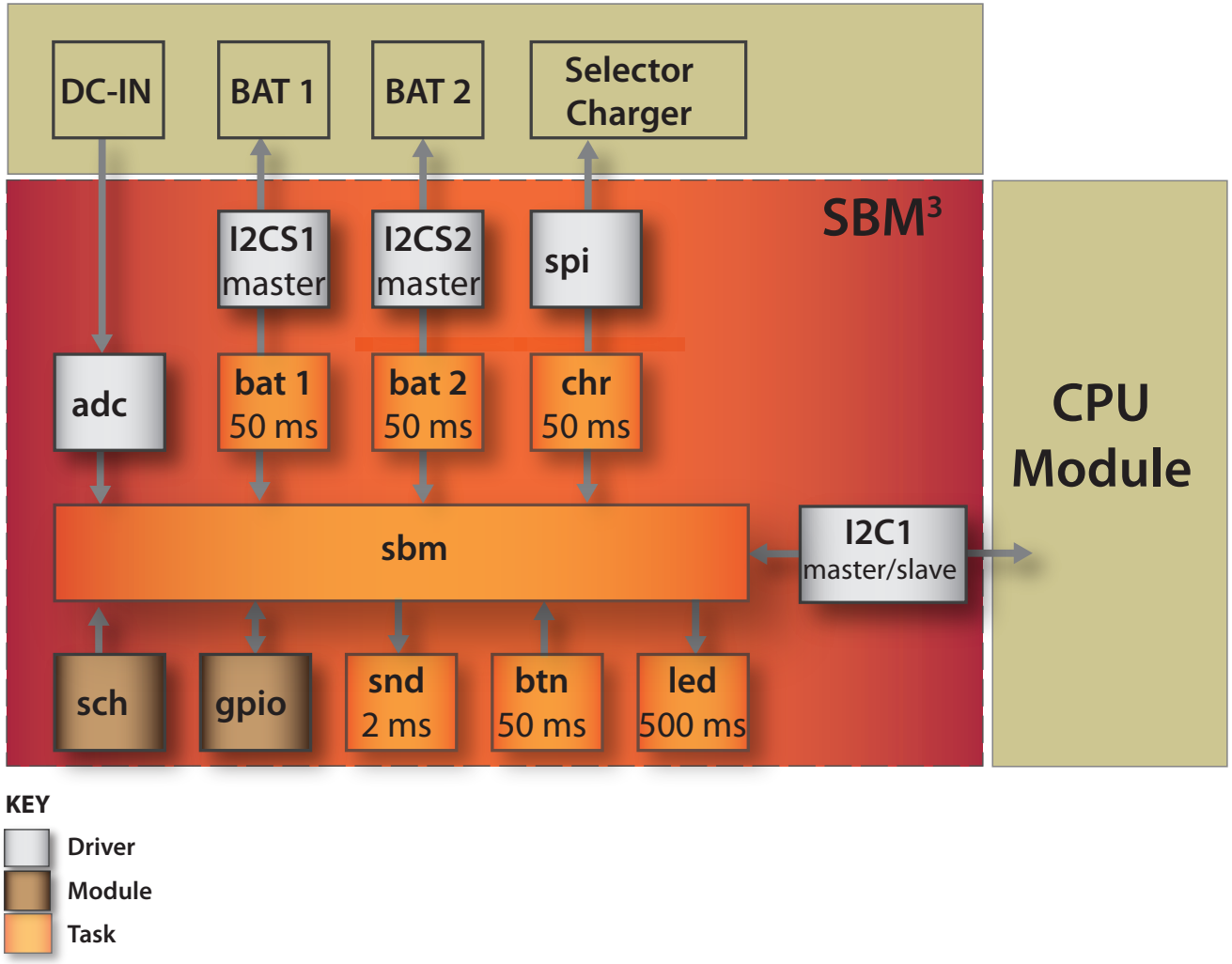

4.1 Main Firmware Tasks

4.1.1 BAT Task (smart battery task)

Battery task runs autonomously using only particular drivers such as I2C bus as interfaces. Every smart battery has its own “bat task” called **BAT1task()** and **BAT2task()**.

Battery task periodically checks if the battery is connected. This is done by means of a simple access reading and waiting for acknowledgment. This state is called **BAT_NOT_PRESENT**. The reading period for connection can be different from the interval used for fast read out phase. BAT tasks for batteries are split into two because if one smart battery is connected, the second one can be removed. This means that the timing interval can also be different at different times.

If the smart battery is connected and does respond, the smart battery is fully read out as fast as possible. This ensures that the operating system is quickly aware that a new battery is present. This state is called **BAT_PLUGGED**.

Later on, only a group of dynamic registers of the smart battery are read, because the rest of the registers are constant. This state is called **BAT_VALIDATED**. If the battery is removed, the BAT task starts with checking the connection reading again.

Data transfer uses cyclic redundancy check (CRC) to accept only trusted data received from the smart battery.

To report run-time data changes from the battery eg. remaining capacity value change, a special interrupt signal BATLOW# is used. The BAT task changes are handled in a special way, so that if a sudden change is noticed at any address position, the status bit BAT_STATUS_BAT_DATA_CHANGED is set. BAT task will continue to read the rest of the registers that may be changed by this internal update of the smart battery.

After the reading of all the remaining registers, the status bit BAT_STATUS_BAT_CHANGES_FINISHED is set. SBM task then sends the BATLOW# interrupt signal to the CPU module in order to indicate a change in the battery manager. This results in an ACPI update request being sent to the operating system.

The gBATdata structure keeps all the data context to be used by other tasks.

4.1.2 BTN Task (power button task)

BTN task runs autonomously, reading the power button in intervals of 50ms. The duration of button-press is measured and evaluated for two possible reactions:

- If the power button is pressed longer than *BTN_SHORT_TIME_DELAY* time constant, *gBTNdata.ShortPressActivated* is set to 1 and the system either switches on or off, depending on the current state.
- If the power button is pressed even longer, with a time equal to or greater than *BTN_LONG_TIME_DELAY* time constant, it is considered as a long press. This forces the system to switch off immediately and the variable *gBTNdata.LongPressActivated* is set to 1. This is similar to ATX long press behavior.

The gBTNdata structure keeps all the data context to be used by other tasks.

4.1.3 LED Task (led on/off/blink functionality)

LED task provides a handling of all LED modes, including all support functions to drive LED high or low in single or in group mode. This task can be used for timed actions on LED and for additional functionality such as blinking if necessary.

4.1.4 SND Task (buzzer functionality)

SND task provides a handling for the buzzer. Several tones are defined in an array *SND_TONES_ARRAY[]* and any of them can be played. It is possible to signal the status of the battery mode efficiently by playing more tones. For example, the tones can sound higher during switch on or lower when switching off.

The adoption of the sound array provides this functionality with various sound options. Each error can be set with a specific tone, to indicate the nature of the problem.

4.1.5 CHR Task (charger task)

CHR task provides full handling of the selector and charger IC LTC1960. This task is set to 400ms execution period.

Charger functionality:

The charger is a state machine that must handle the smart batteries properly. The main functionality is to charge the smart batteries in parallel or in sequential mode. In sequential mode, the charging priority of the batteries can be set. By default, the second battery (considered as a backup) has to be charged first and discharged last.

If two dissimilar batteries are connected, the supported dual charger mode prevents the smart battery with the lower voltage capacity from over-current. The smart battery with lower voltage takes more current and must be read periodically. This adjusts the dual charging current so that it is not acting as 2x single charge. Dual charging current is dynamically calculated and stored in a variable *gCHRdata.uiDualCurrent*. Its value changes to the maximum value allowed by the smart battery with lower voltage. An optimal case would be to have two similar smart batteries with same or very close parameters.

The charger supports low current mode in order to recover a depleted smart battery from its protection mode. In this mode, the smart battery is internally switched off and needs a special procedure for the recovery. Another support offered by the charger is the condition cycle, if it is requested from the smart battery. In this case, the smart battery has lost track of the state of the cell chemistry. This means that the smart battery will not be able to estimate the remaining capacity or it will report a false remaining capacity.

Commands to the charger are sent per SPI commands where the returned data are always checked for validity; otherwise the command will be sent again. There is a mechanism to update the charger with only the data that has been changed. The exception is a periodic command *CHRupdateCharger()* used when charging the batteries. This must be used to keep the charger working, otherwise its safety mechanism will be activated after a certain timeout and the charging will stop. The charger task will analyze the charge requests from batteries, with their voltage and current requirements and then will decide on the amount of current necessary to protect the maximum power dissipation of the battery charging system.

The “Rsense” resistor value in the charger circuitry is used for calculating the charging current. In the firmware, the value *CHR_RSENSE_RESISTOR* must be updated if the Rsense resistor changes in hardware.

The maximum charge voltage is given by *CHR_BATn_CHARGE_VOLTAGE_MAX* and the currents by *CHR_BATn_CHARGE_CURRENT_MAX.*

Condition Cycle Block Diagram (simplified)

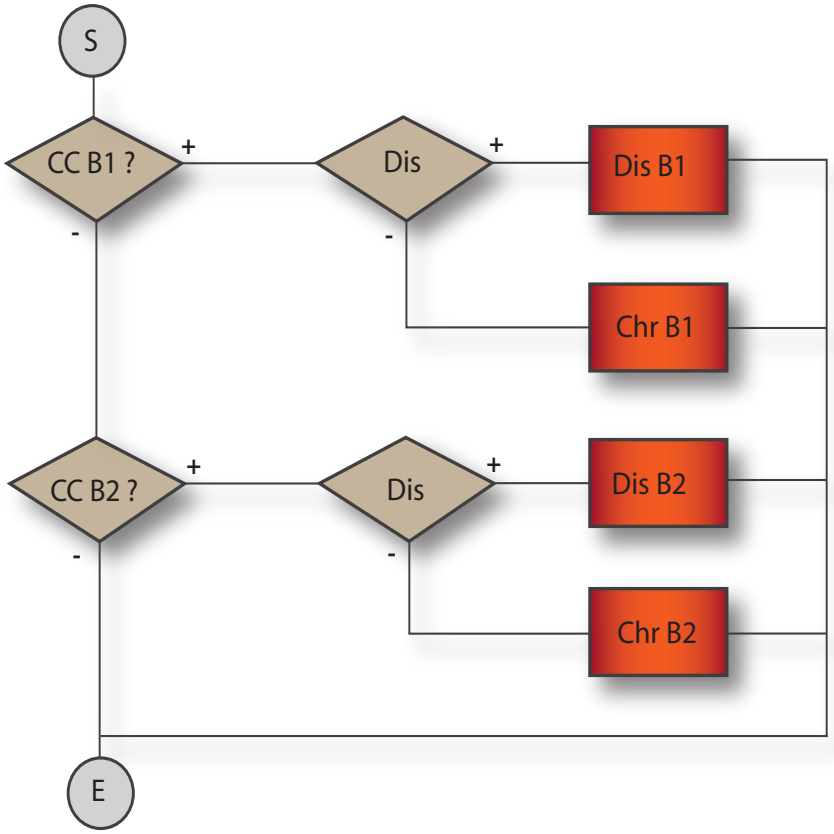

KEY

B1= Battery 1
B2= Battery 2
CC= Condition cycle
Dis= Discharge
S= Start
E= End

Charge Block Diagram (simplified)

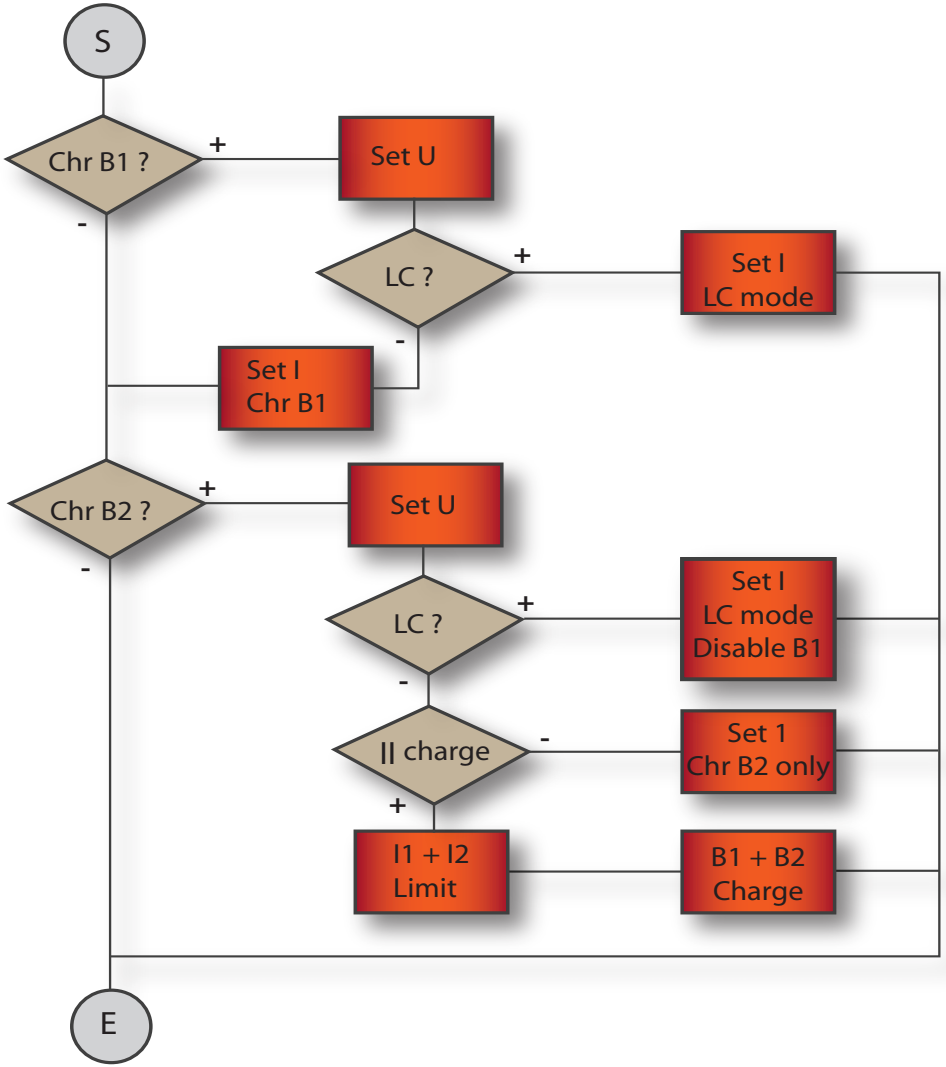

KEY

B1= Battery 1
B2= Battery 2
LC= Low current
S= Start
E= End

Running-on-batteries Block Diagram (simplified)

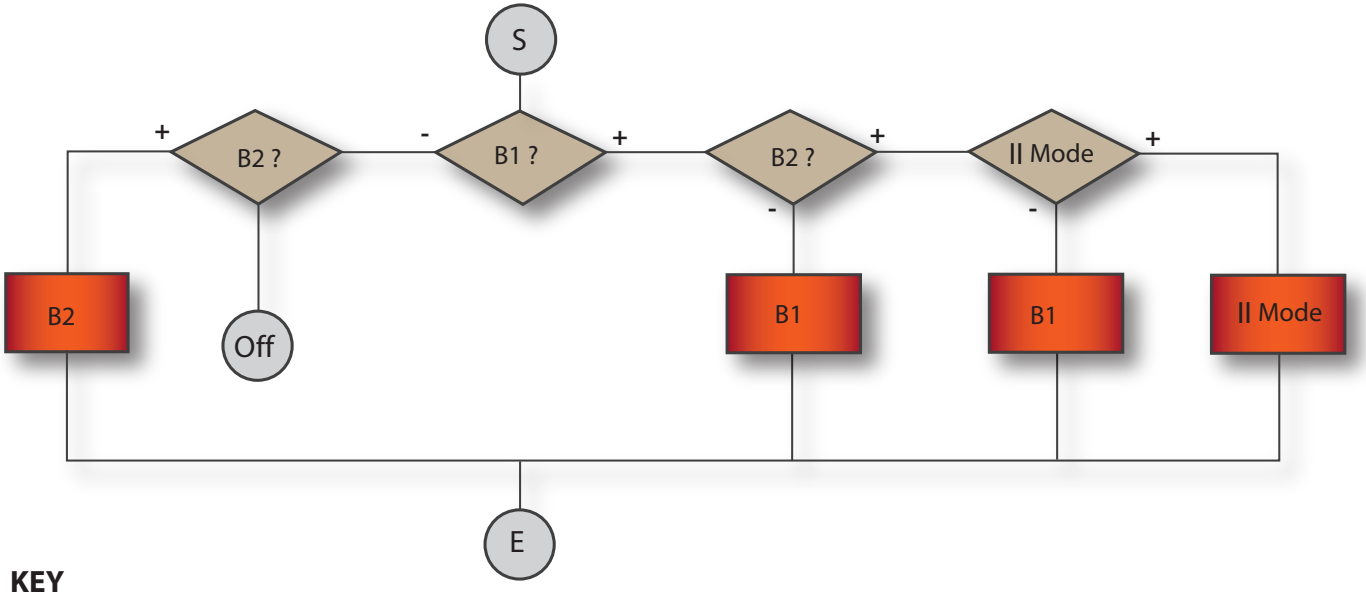

KEY

B1= Battery 1
B2= Battery 2
II Mode= Dual mode
S= Start
E= End

4.1.6 SBM Task (smart battery manager task)

SBM task is the main power management task responsible for all the power on and off sequences, such as power supply switch-on and the handling of all control signals.

SBM task ensures proper communication via I2C slave to CPU module. Any change of batteries, power sources, charging states etc. is signaled to CPU module with the interrupt line via I2C bus by means of the signal BATLOW#. For the simplified state diagram, refer to section 4.1.7.

SBM task provides the deep discharge protection functionality so that when in G2 mode (Off mode) and only the batteries are attached, the batteries are not discharged. After a time out SB_DEEP_DISCHARGED_TIMEOUT, it switches off the whole battery kit. The STM32 controller also switches off so that a stock laying device, for example, will not discharge batteries anymore thereby extending its lifetime to the maximum.

With a very short power button press, the SBM task will quickly read out the registers from the smart battery. The LEDs will show the

remaining capacity for a short time *SB_DEEP_DISCH_LED_SHOW_TIMEOUT*, and immediately enter the deep protection mode again. After the connection of DC-IN, the device will be powered all the time and the deep discharge protection mode will be disabled.

Firmware revision is stated in the sbm.h under *SBM_FW_REV_NO*. It can be read out later via I2C from address 0x3C.

Turn-on after power loss functionality is executed during the powering of the device from DC-IN. The battery controller goes from G2 mode to G1 mode shortly, to switch the +5Vsb voltage on to the CPU module for a time *SBM__REMAIN_ON_TIMEOUT*. If this feature is activated, the device will switch on, otherwise the SBM task goes into G2 state again.

SBM task checks batteries and initiates a power off event if the device is turned on but out of battery power.

4.1.7 Simplified State Diagram

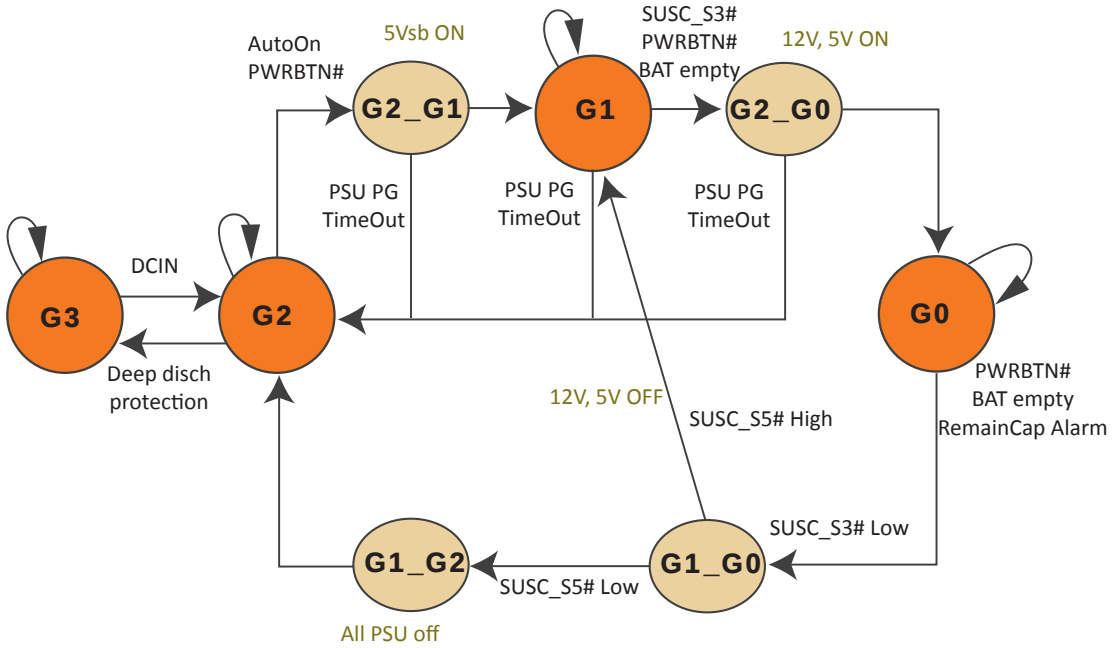

4.2 Firmware Support Modules

4.2.1 ADC Module (input voltage reading)

ADC module is used to periodically read the input voltage of the battery kit, in order to adopt charging behavior accordingly. Periodic reading is set by using DMA controller. This immediately copies converted ADC values to *gADCdata.uiADCConvertedValue* variable as soon as ADC convertor is finished. An additional function to calculate the absolute value that represents the voltage value, is called *ADCcalculateInputVoltage()*. This function must be called additionally as soon as the absolute value of the voltage representation is needed, shortly before its evaluation.

Parameter holding the current voltage value is *gADCdata.uiInputVoltage* in a format :100.

For example, value=1956 means 19,56V.

Note

Reaction on input voltage value can be additionally handled e.g to reduce charging current and prevent heating up of the device if the system is in S0 running mode. Recommended place for this input voltage consideration is in the charger module (CHR module), where an action must be decided if the input voltage changes.

Very low input voltage value or very high protection is already handled in the hardware by IC selector/charger settings, which immediately disables charging and provides prevention against input voltage if it is out of limit.

4.2.2 GPIO Module (GPIO support functions)

GPIO module is used to set up GPIO pins to certain functions like input, output, alternative function etc.

4.2.3 PWR Module (handling of all power control signals)

PWR module provides a group of functions to handle all control signals for all power supply circuits on the battery kit device. Every PSU can be switched on or off as necessary in every power state of the battery manager.

Switch on +12V PSU command is e.g. *PWRpinOutOn(PWR_VR12V_EN)* etc.

Note

There is also a special debug feature in PWR module to help tune and check power supply circuitry. If power button is pressed during the power-up of the device, the power debug feature will be activated by enabling PWR_ALL_POWER_ON. The firmware will then enable all PSUs on the device and will enter an endless loop, to help in testing and measuring. Do not forget to disable it for serial production.

BATLOW# signal must be configured as open drain always. This is used on some Intel® platforms to prevent the system from switching on automatically. It can be forced low from CPU module side.

4.2.4 SCH Module (preemptive multitasking scheduler)

SCH module includes all necessary functionality of the firmware for implementing a preemptive multitasking core. The following seven tasks are used for this battery kit implementation:

- *SCH_TASK_0 (LEDtask())* - LED timing handling task
- *SCH_TASK_1 (BTNtask())* - Power button timed handling task
- *SCH_TASK_2 (SNDtask())* - Sound task managing tones and its sequences
- *SCH_TASK_3 (CHRtask())* - Charger and selector task for battery care
- *SCH_TASK_4 (BAT1task())* - Run-time read out task for battery 1
- *SCH_TASK_5 (BAT2task())* - Run-time read out task for battery 2
- *SCH_TASK_6 (SBMtask())* - Main battery manager functionality

4.2.5 SPI Module (SPI communication module)

SPI module is a driver that provides a mechanism for SPI communication with a selector and charger IC. The SPI transfer is interrupt handled. Requests for output transfer and read out returned data are handled with a special locking mechanism to ensure that the data returned will be read only by the same function that initiated that particular SPI data transfer.

4.2.6 I2C1 Module (I2C communication module master/slave)

I2C1 module is a driver that provides a mechanism for I2C communication with a host CPU module and slaves itself on the battery kit such as with an EEPROM and temperature sensor. It includes both master and slave functionality .

Requests for master transfers and returned data are handled with a special locking mechanism to ensure that the data returned will be read only by the same function that initiated that particular I2C data transfer.

4.2.7 I2CS, I2CS1 Module (I2C communication module master/slave)

Both I2CS and I2CS1 modules are I2C software polled drivers for the connection of both batteries. Both support Packet Error Check (PEC) and CRC correction. This should be enabled to receive and accept only valid data from the I2C bus. BAT1 uses I2CS1 driver and BAT2 uses I2CS driver.

4.2.8 Flash Module

FLASH module handles configuration data for the battery kit. Configuration data can be read via I2C to CPU module from OP_SMB_CFG1 – OP_SMB_CFG3 registers. Writing new configuration data to the OP_SMB_CFG1 register will start executing the flash writing cycle. Internal flash memory of STM32 ARM controller is used to store config data. After the start of the battery kit, all configuration data are read from flash and used as start up default values for all dedicated values. Flash write cycles are limited. Therefore, it is not recommended to write or change the config data frequently.

4.2.9 Main Function

Main function provides the initialization of all modules, NVIC interrupt table settings and all proper task execution as set in SCH module.

4.2.10 WDT Module

WDT module includes init, reset and stop functions for WDT functionality used in the conga-SBM^3 battery kit. By default, a timeout of three seconds is set. The STM32 controller is reset after exceeding the timeout.

5 conga-SBM³ Customization

5.1 Hardware Customization

Microcontroller: ARM based 32 bit. P/N: STM32F100R8T6B

Debugging tools: Hitex Cortino jtag debugger, which includes Hitex IDE with GNU compiler and linker toolchain.

For efficient programming and debugging of the conga-SBM³, congatec AG recommends that the customer should:

- Buy the original Hitex programmer for ARM32b Cortex Applications.
- Install the enclosed software including HiTOP version 5.4 or higher. Choose the GNU compiler and provide the necessary software registration in accordance to the software guideline.
- Start Hitop after a successful installation. This is done by double-clicking the HiTOP icon on the desktop or alternatively by clicking “Start-> Programs -> HiTP54-Cortino”
- Open the conga-SBM³ project file “SBM3.htp” from the source directory by clicking the “Project-> Open” Menu.
- Start the firmware by clicking “Run ->Go” or by pressing key “F5”.

5.1.1 Voltage Adjustment

5.1.1.1 Input Voltage Threshold

If the voltage at DCDIV is above the DCDIV comparator threshold 1.19V, then the DC bit is set and the wall adapter power is considered to be adequate to charge the batteries. If DCDIV rises more than 1.8V above VCC, then all of the power-path switches are latched off until all power is removed.

Smart Battery Cell Count [N]	R99 [kOhm]	R100 [kOhm]	R102 [kOhm]	Input Voltage Range for charging [V]
2S	3.90	24.00	4.02	9.40 - 30.00
3S	3.90	8.20	1.20	13.60 - 30.00
4S	8.20	8.20	1.20	17.80 - 30.00

5.1.1.2 LOPWR

If the voltage at LOPWR is lower than the LOPWR comparator threshold 1.19V, then the system power has failed and power is autonomously switched to a higher voltage source, if available.

Smart Battery Cell Count [N]	R103 [kOhm]	R104 [kOhm]
2S	820.00	210.00
3S	820.00	127.00
4S	820.00	93.10

5.1.2 Current Adjustment

5.1.2.1 Adapter Limiting

R93 monitors and limits the input current, to protect the wall adapter. If input current is higher than set, the charger decreases the charge current so that batteries can keep input current under limit.

R93 [mOhm]	Input Current Limit [A]
21.3	4.7
16.7	6.0
10.0	10.0

5.1.2.2 Maximum Charge Current

Charging current is sensed on sense resistor R106. If dual charging is used, both BAT1 and BAT2 currents must be added to calculate R106.

R106 [mOhm]	Charge Current [A]
25.0	4.1
20.0	5.1
12.0	8.2
10.0	10.2

Note

Do not forget to also reflect the proper value of R106 in firmware header file “chr.h” as shown below:

#define CHR_RSENSE_RESISTOR 15 where 15 is the 15mOhm sense resistor used for current calculation.

5.1.2.3 Short-Circuit Protection

Output current to device supplied by conga-SBM³ is sensed on sense resistor R97. If the device draws higher current than set by R97, then all of the power-path switches are turned off and the FAULT bit (FA) is set.

R97 [mOhm]	Short Current Protection [A]
100.0	1.02
50	2.05
25.0	4.09
15.0	4.65
12.0	8.18

Note

Make sure that this does not occur in normal running state, during switch on/off or between sleep mode transitions. This should be used only as a protective circuit:

5.2 Firmware Customization

5.2.1 Voltage Adjustment

5.2.1.1 Input Voltage Threshold

The input voltage thresholds for minimal and maximal voltages are defined in the following macros. The device will only work within the range specified in header file “sbm.h” as shown below:

Macros in module “sbm.h”
#define SBM_DCIN_MIN_LIMIT 750 /* min input voltage for enabling device function in 10mV units */
#define SBM_DCIN_MAX_LIMIT 3050 /* min input voltage for enabling device function in 10mV units */

5.2.1.2 Smart Battery Voltage and Current Limits

The minimum or maximum voltage and current limits for every cell count of smart battery are defined in the following macros in header file “chr.h”:

Macros in module “chr.h”
#define CHR_BAT1_CHARGE_CURRENT_MAX 4000 /* Max current allowed by hardware */
#define CHR_BAT1_CHARGE_VOLTAGE_MAX 8400 /* Max voltage allowed, depends on cell count 4.2V / 1S */
#define CHR_BAT2_CHARGE_CURRENT_MAX 4000 /* Max current allowed by hardware */
#define CHR_BAT2_CHARGE_VOLTAGE_MAX 8400 /* Max voltage allowed, depends on cell count 4.2V / 1S */

Recommended limits for common Li-ion smart batteries are stated below:

Smart Batttery Cell Count [N]	Macro Name	Voltage [mV]
2S	CHR_**BATn**_CHARGE_VOLTAGE_MAX	8400
3S	CHR_**BATn**_CHARGE_VOLTAGE_MAX	12600
4S	CHR_**BATn**_CHARGE_VOLTAGE_MAX	16800

Note

All parameters of non standard smart batteries used in the conga-SBM³ battery kit must be properly set in all the firmware parameters in the header files. All above values are based on 3.7Vnom/cell with max. voltage 4.2V/cell. All other parameters must be properly recalculated:

5.2.1.3 Depleted Voltage and Current Change For Other Smart Batteries

Voltage and current settings for depleted batteries procedure should be adjusted as shown below:

Macros in module “chr.h”
#define CHR_CHARGE_LC_DEPLETED_VOLTAGE 16600 /* Higher voltage used for depleted batteries at low depleted current [10mV unites]*/
#define CHR_CHARGE_LC_DEPLETED_CURRENT 2100 /* Low current used for depleted batteries [mA/8] */

Recommended limits for common Li-ion smart batteries are stated below:

Smart Batttery Cell Count [N]	Macro Name	Voltage [mV]
2S	CHR_CHARGE_LC_DEPLETED_VOLTAGE	8600
3S	CHR_CHARGE_LC_DEPLETED_VOLTAGE	12800
4S	CHR_CHARGE_LC_DEPLETED_VOLTAGE	17200

5.2.1.4 New Charge Current Calculation

After hardware change of R106, the following firmware change is necessary:

Macros in module “chr.h”
#define CHR_RSENSE_RESISTOR 15 /* 15mOhm sense resistor used for current calculation!*/

6 Signal Descriptions and Pinout Tables

The following section describes the signals found on the conga-SBM³. This table describes the terminology used in this section for the Signal Description tables.

The PU/PD column indicates if an internal pull-up or pull-down resistor has been used on the conga-SBM³, if the field entry area in this column for the signal is empty, then no pull-up or pull-down resistor has been implemented.

The "#" symbol at the end of the signal name indicates that the active or asserted state occurs when the signal is at a low voltage level. When "#" is not present, the signal is asserted when at a high voltage level.

Note

The Signal Description tables do not list internal pull-ups or pull-downs implemented by the chip vendors, only pull-ups or pull-downs implemented by congatec are listed. For information about the internal pull-ups or pull-downs implemented by the chip vendors, refer to the respective chip's datasheet.

Table 4 Signal Tables Terminology Descriptions

Term	Description
PU	congatec implemented pull-up resistor
PD	congatec implemented pull-down resistor
I/O 3.3V	Bi-directional signal 3.3V tolerant
I/O 5V	Bi-directional signal 5V tolerant
I 3.3V	Input 3.3V tolerant
I 5V	Input 5V tolerant
I/O 3.3VSB	Input 3.3V tolerant active in standby state
O 3.3V	Output 3.3V signal level
O 5V	Output 5V signal level
OD	Open drain output
P	Power Input/Output

6.1 SBM³ Connector Pinouts

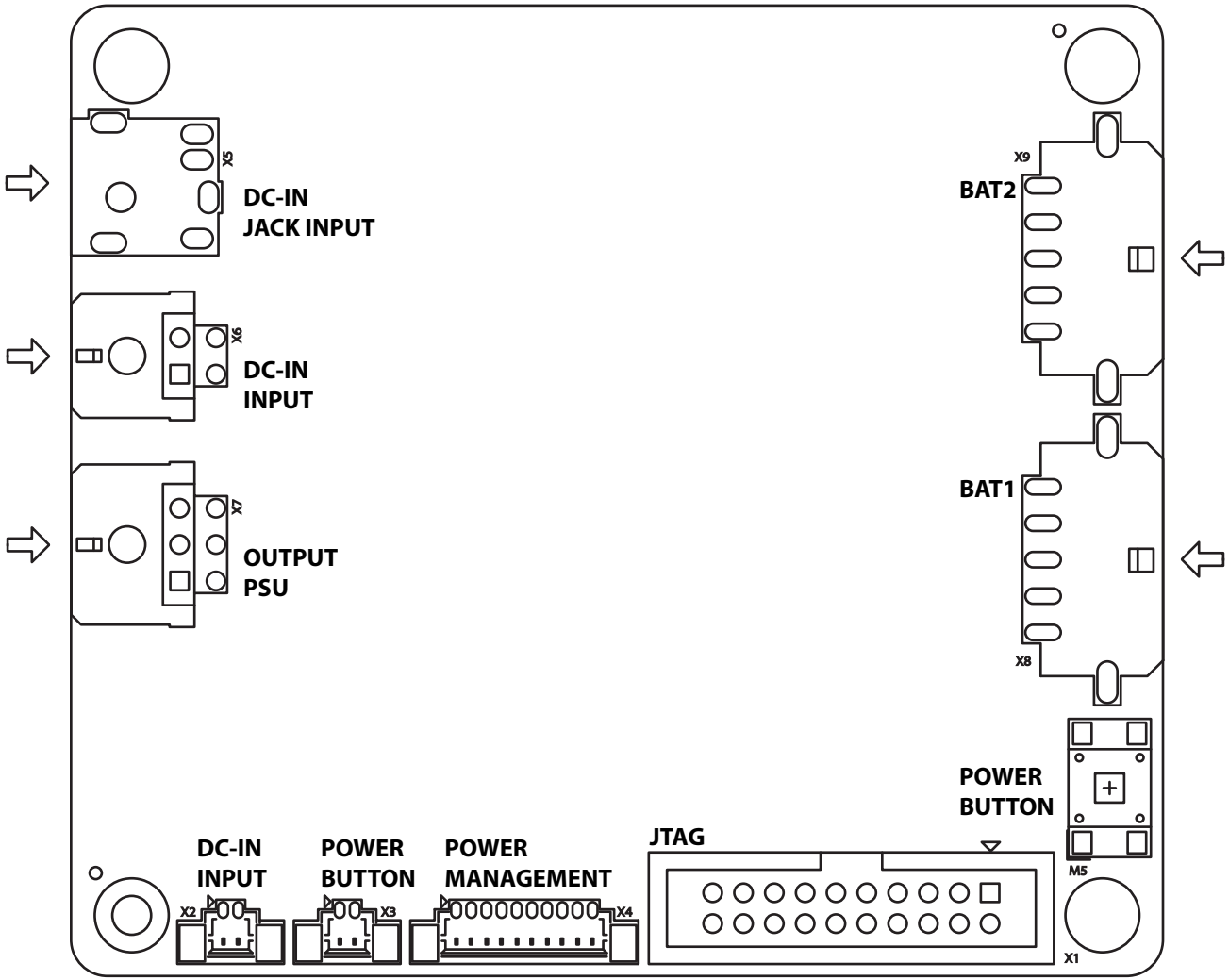

6.1.1 JTAG Connector

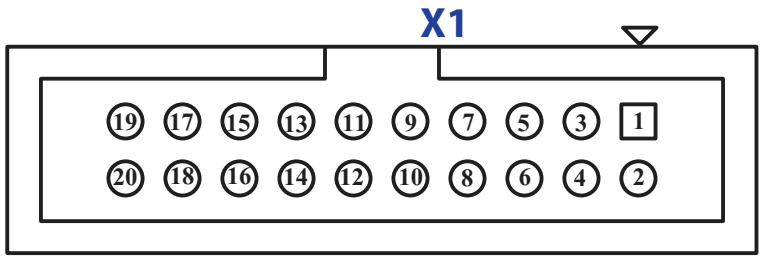

Pin	Signal	Description	Input / Output	PU/PD
1	V_3V_ALW	VCC	P	
2	V_3V_ALW	VCC	P	
3	JTAG_nJRST	JTAG Interface	I/O 3V3	
4	GND	GND	P	
5	JTAG_TDI	JTAG Interface	I/O 3V3	
6	GND	GND	P	
7	JTAG_TMS	JTAG Interface	I/O 3V3	
8	GND	GND	P	
9	JTAG_TCK	JTAG Interface	I/O 3V3	
10	GND	GND	P	
11	JTAG11	JTAG Interface	I/O 3V3	
12	GND	GND	P	
13	JTAG_TDO	JTAG Interface	I/O 3V3	
14	GND	GND	P	
15	CPU_nRST	CPU Reset	I/O 3V3	
16	GND	GND	P	
17	JTAG17	JTAG Interface	I/O 3V3	
18	GND	GND	P	
19	JTAG19	JTAG Interface	I/O 3V3	
20	GND	GND	P	

Copyright © 2012 congatec AG

6.1.2 DC-Input (+3V Li Battery)

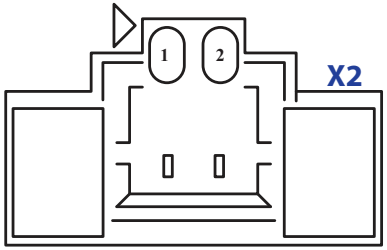

Pin	Signal	Description	Input / Output	PU/PD
1	VBAT_IC	VCC batt	P	
2	GND	GND	P	

6.1.3 Power Button

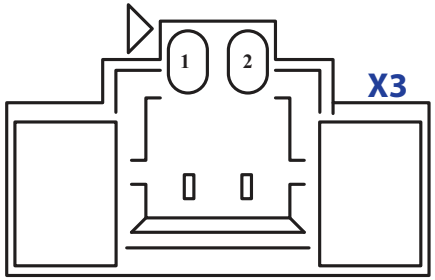

Pin	Signal	Description	Input / Output	PU/PD
1	BAT12D	external PWR Btn	I/O	
2	BAT12DS	external PWR Btn	I/O	

6.1.4 Power Management Connector

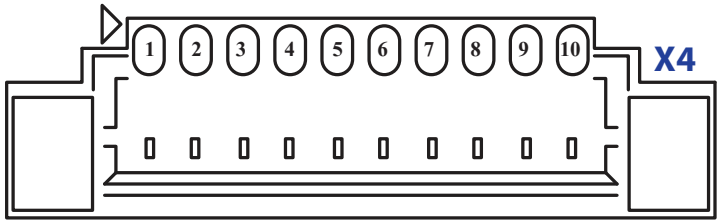

Pin	Signal	Description	Input / Output	PU/PD
1	SUSC_S5#	S5 request	I 3V3, FT	
2	SUSC_S3#	S3 Sleep request	I 3V3, FT	
3	SUSC_STAT#	Sleep request	I 3V3, FT	
4	CPU_SDA	I2C data line	I/O 3V3, FT	
5	CPU_SCL	I2C clock line	I/O 3V3, FT	
6	BAT_LOW	I2C interrupt line	OC, 3V3, FT	
7	PWR_BTN_CPU#	Power button signal to CPU module	OC, 3V3, FT	
8	CPU_RESET#	Reset to CPU module	OC, 3V3, FT	
9	PWR_OK	Power OK signal to CPU module	OC, 3V3, FT	
10	GND	GND	P	

6.1.5 DC-IN Jack Input

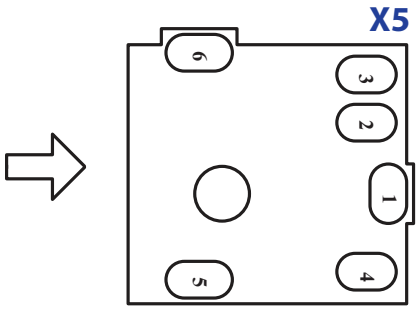

Pin	Signal	Description	Input / Output	PU/PD
1	DC_IN_CON	DC input	P	
2	N.C.	N.C.	N.C.	
3	GND	GND	P	
4	GND	GND	P	
5	GND	GND	P	
6	GND	GND	P	

6.1.6 DC-IN Input

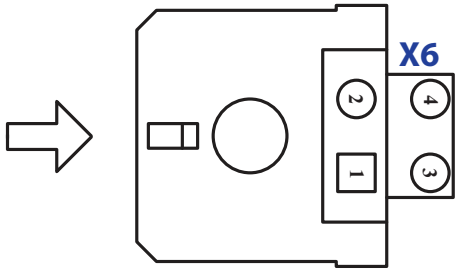

Pin	Signal	Description	Input / Output	PU/PD
1	DC_IN_CON	DC input	P	
2	DC_IN_CON	DC input	P	
3	GND	GND	P	
4	GND	GND	P	

6.1.7 PSU Output

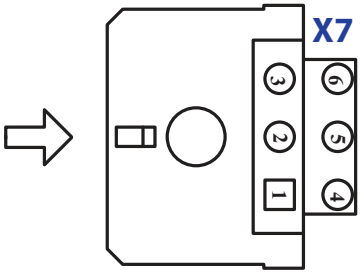

Pin	Signal	Description	Input / Output	PU/PD
1	GND	GND	P	
2	GND	GND	P	
3	V_5V_SB	VCC 5V SB output	P	
4	V_5V	VCC 5V output	P	
5	V_12V	VCC 12V output	P	
6	V_12V	VCC 12V output	P	

6.1.8 BAT1 Connector

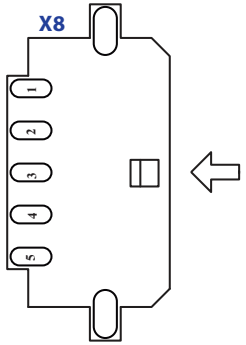

Pin	Signal	Description	Input / Output	PU/PD
1	B1SCLK	SMB clock	I/O 3V3	PU 10k V_3V3_ALW
2	B1SDAC	SMB data	I/O 3V3	PU 10k V_3V3_ALW
3	TB1	TERM	I	PD 0Ohm
4	GND	GND	P	
5	U_BAT1	VBAT	P	

6.1.9 BAT2 Connector

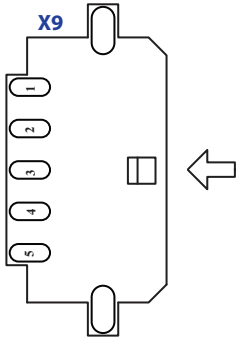

Pin	Signal	Description	Input / Output	PU/PD
1	B2SCLK	SMB clock	I/O 3V3	PU 10k V_3V3_ALW
2	B2SDAC	SMB data	I/O 3V3	PU 10k V_3V3_ALW
3	TB2	TERM	I	PD 0Ohm
4	GND	GND	P	
5	U_BAT2	VBAT	P	

6.2 conga-SBM³ connections with congatec Boards

6.2.1 conga-SBM³ connection with COM Express modules

Table 5 conga-SBM³ X4 Connector (Control Cable)

conga-SBM³ (X4 Connector)		conga-CMCB (X20 Connector)		conga-CEVAL (X27 Connector)		conga-TEVAL (X53 Connector)		Description
Pin	Signal	Pin	Signal	Pin	Signal	Pin	Signal	
1	SUSC_S5#	7	SUS_S5#	26	SUS_S5#	26	SUS_S5#	S5 request
2	SUSC_S3#	6	SUS_S3#	15	SUS_S3#	15	SUS_S3#	S3 Sleep request
3	SUSC_STAT#	5	SUS_STAT	23	SUS_STAT	23	SUSC_STAT	Sleep request
4	CPU_SDA	2	SDA	5	I2DAT	5	I2DAT	I2C data line
5	CPU_SCL	3	SCL	7	I2CLK	7	I2CLK	I2C clock line
6	BAT_LOW	4	BATLOW#	31	BATLOW#	31	BATLOW#	I2C interrupt line
7	PWR_BTN_CPU#	8	PWRBTN#	39	PWRBTN#	39	PWRBTN#	Power button signal to CPU module
8	CPU_RESET#	nc	nc	36	SYS_RESET#	36	SYS_RESET#	Reset to CPU module
9	PWR_OK	nc	nc	40	PWR_OK	40	PWR_OK	Power OK signal to CPU module
10	GND	1	GND	17	GND	17	GND	GND

Table 6 conga-SBM³ X7 Connector (Power Cable)

conga-SBM³ (X7 Connector)		conga-CMCB (X19 Connector)		conga-CEVAL (X70 Connector)		conga-TEVAL (X59 Connector)		Description
Pin	Signal	Pin	Signal	Pin	Signal	Pin	Signal	
1	GND	3	GND	3	GND	3	GND	GND
2	GND	4	GND	5	GND	5	GND	GND
3	V_5V_SB	5	+5V STB	9	+5V SB	9	5V_SB	VCC 5V SB output
4	V_5V	NC	NC	4	+5V	4	+5V	VCC 5V output
5	V_12V	1	+12V	10	+12V	10	+12V	VCC 12V output
6	V_12V	2	+12V	NC	NC	NC	NC	VCC 12V output

6.2.2 conga-SBM³ Connection with Qseven modules

Table 7 conga-SBM³ X4 Connector (Control Cable)

conga-SBM³ (X4 Connector)		conga-QMCB (X20 Connector)		conga-QEVA (CN35 Connector)		Description
Pin	Signal	Pin	Signal	Pin	Signal	
1	SUSC_S5#	7	SUS_S5#	26	SUS_S5#	S5 request
2	SUSC_S3#	6	SUS_S3#	15	SUS_S3#	S3 Sleep request
3	SUSC_STAT#	5	SUS_STAT	23	SUS_STAT	Sleep request
4	CPU_SDA	2	SDA	5	I2DAT	I2C data line
5	CPU_SCL	3	SCL	7	I2CLK	I2C clock line
6	BAT_LOW	4	BATLOW#	31	BATLOW#	I2C interrupt line
7	PWR_BTN_CPU#	8	PWRBTN#	39	PWRBTN#	Power button signal to CPU module
8	CPU_RESET#	NC	NC	36	SYS_RESET#	Reset to CPU module
9	PWR_OK	NC	NC	40	PWR_OK	Power OK signal to CPU module
10	GND	1	GND	17	GND	GND

Table 8 conga-SBM³ X7 Connector (Power Cable)

conga-SBM³ (X7 Connector)		conga-QMCB (X19 Connector)		conga-QEVA (CN38 Connector)		Description
Pin	Signal	Pin	Signal	Pin	Signal	
1	GND	3	GND	3	GND	GND
2	GND	4	GND	5	GND	GND
3	V_5V_SB	5	+5V SB	9	+5V SB	VCC 5V SB output
4	V_5V	1	VCC	4	+5V	VCC 5V output
5	V_12V	NC	NC	10	+12V	VCC 12V output
6	V_12V	NC	NC	NC	NC	VCC 12V output

Copyright © 2012 congatec AG

7 Interface Specification

7.1 Introduction

Despite the various specifications and consortia that define the structure of battery operated systems, there are no ready-made solutions on the market that can be used with any computer board without the need to implement special customizations to the system BIOS.

Notebook manufacturers use their own non-standardized Smart Battery solutions (mostly a small microcontroller, which implements the functions of the charger and the Smart Battery System Manager) where the adaptation to the Smart Battery is done in their system BIOS.

In order to facilitate the development of battery powered mobile systems based on Embedded modules, congatec defined an interface for the exchange of data between a CPU module (using an ACPI operating system) and a Smart Battery system. A system developed according to this interface specification can provide the battery management functions supported by an ACPI capable operating system (e.g. charge state of the battery, information about the battery, alarms/events for certain battery states etc.) without the need for any additional modifications to the system BIOS.

The battery management solution provided by congatec is related to the system defined by the 'Smart Battery System Manager Specification 1.0 (Release Candidate b). The two main parts in this system are the Smart Battery System Manager (SBSM) on the XTX™, COM Express™ or Qseven carrier board and the congatec Board Controller (system host) that can be found on the XTX™, COM Express™ or Qseven module. The task of the SBSM is to manage the Smart Battery System components such as Charger, Smart Batteries and power path controller and to cache and update the status and control registers of these devices.

The active part in the communication between the ACPI OS and the SBSM is the congatec Board Controller (cBC). One of the major differences between the congatec solution and the one defined in the SBSM Specification can be found here. In order to avoid conflicts on the SMBus between the different smart devices, congatec has chosen to use the I²C bus for the data transfer between the system host (XTX™, COM Express™ or Qseven module) and the SBSM. The system host reads/writes the data to/from the SBSM control registers and communicates with the ACPI OS by using the Control Method Battery (CMB) commands.

The cBC only communicates with the SBSM and not with the other components in the Smart Battery System such as Smart Batteries.

Copyright © 2012 congatec AG

7.2 Electrical Connections

7.2.1 COM Express™ Electrical Connections

The smart battery system manager (SBSM) must be connected to the I²C-bus using the 7-bit device address 0001011xb. In other words, 16h for write operations and 17h for read operations.

The BATLOW# signal is used as an alarm interrupt to notify the system host that a critical event or a state change has occurred. The SBSM acts always as slave and the cBC always as master.

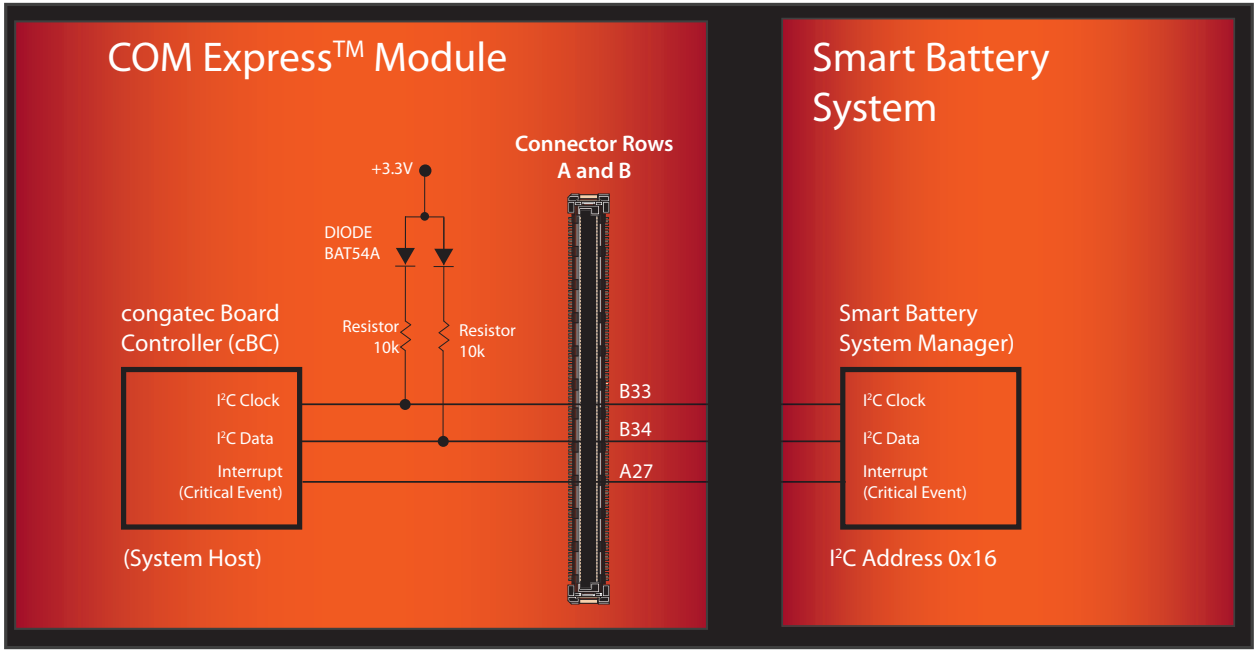

Table 9 Signal Descriptions (COM Express Connection)

Signal	Description	I/O	PU/PD	Comment
I2CLK	I2C bus clock	O 3.3V	PU 4k7 3.3V	COM Express™ connector row B, pin 33
I2DAT	I2C bus data	I/O 3.3V	PU 4k7 3.3V	COM Express™ connector row B, pin 34
BATLOW#	Critical Event Interrupt (battery low input)	I 3.3V	*	COM Express™ connector row A, pin 27

Note

** Refer to the corresponding COM Express™ module user's guide.*

7.2.1.1 conga-SBM³ connection with CMCB mini-carrier board

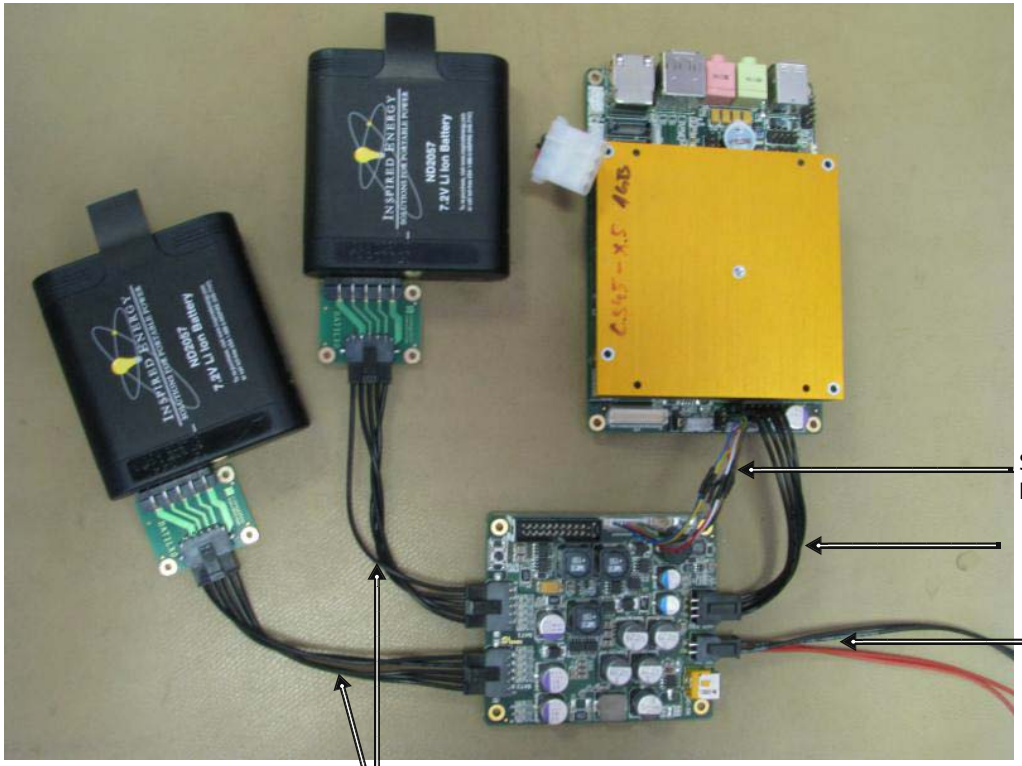

Cable Description

	CMCB Mini-carrier Board	PN	Description	SBM3 Connector	Evaluation Board Connector
1	Data Control Cable	14000076-A	SBM3 CMCB-QMCB Control Cable	X4	X20
2	Power Cable	14000075-A	SBM3 CMCB-QMCB Power Cable	X7	X19
3	Battery 1	14000080-A	SBM3 Battery Power Cable	X8	
4	Battery 2	14000080-A	SBM3 Battery Power Cable	X9	
5	Input Power Cable	14000077-A	SBM3 Power Input Cable	X6	
6	Notebook AC-DC Adapter	10000079-B	90W, 19V@4.7A, ADP-90SB, Plug 5.5x2.5mm	X5	
7	HDD Power Cable from SBM3	14000032-A	Cab-SATA Power Cable		X6 or X8

7.2.1.2 conga-SBM³ connection with CEVAL Evaluation Board

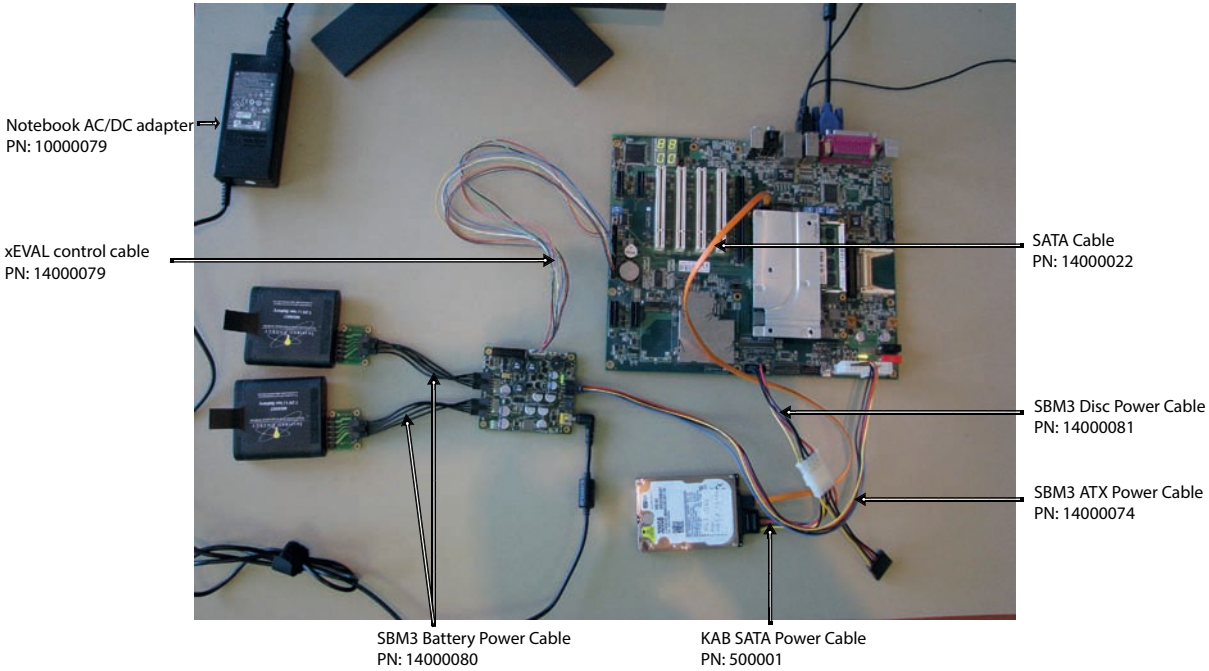

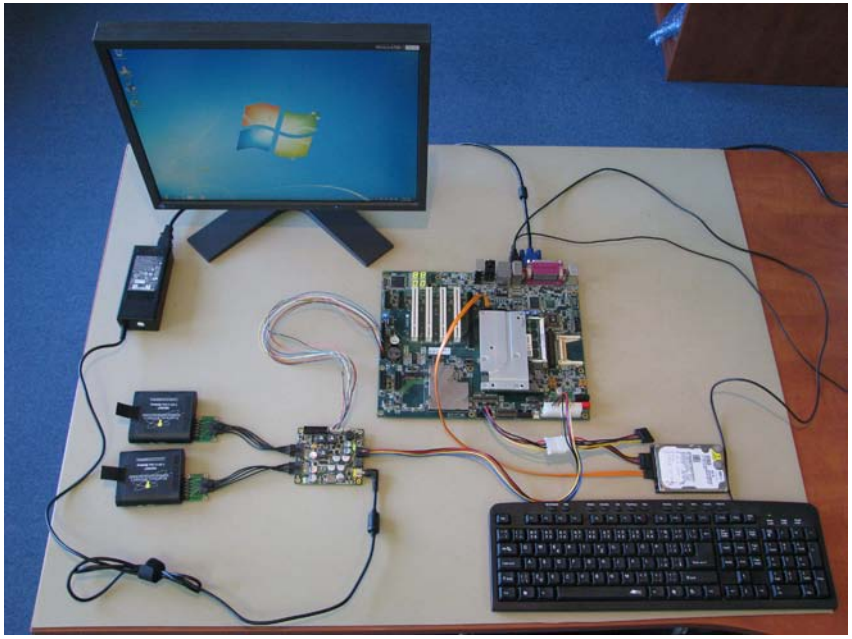

Cable Description

	CEVAL B.0 Evaluation Board	PN	Description	SBM3 Connector	Evaluation Board Connector
1	Data Control Cable	14000079-B	SBM3 xEVAL Control Cable	X4	X27
2	Power Cable	14000074-A	SBM3 ATX Power Cable	X7	X70
3	Battery 1	14000080-A	SBM3 Battery Power Cable	X8	
4	Battery 2	14000080-A	SBM3 Battery Power Cable	X9	
5	Input Power Cable	14000077-A	SBM3 Power Input Cable	X6	
6	Notebook AC-DC Adapter	10000079-B	90W, 19V@4.7A, ADP-90SB, Plug 5.5x2.5mm	X5	
7	HDD Power Cable	14000081-A	SBM3 Disc Power Cable for CEVA and PEVA		X2
8	SATA-HDD Power Cable	500001-A	KAB-SATA Power Cable		

7.2.1.3 conga-SBM³ connection with TEVAL Evaluation Board

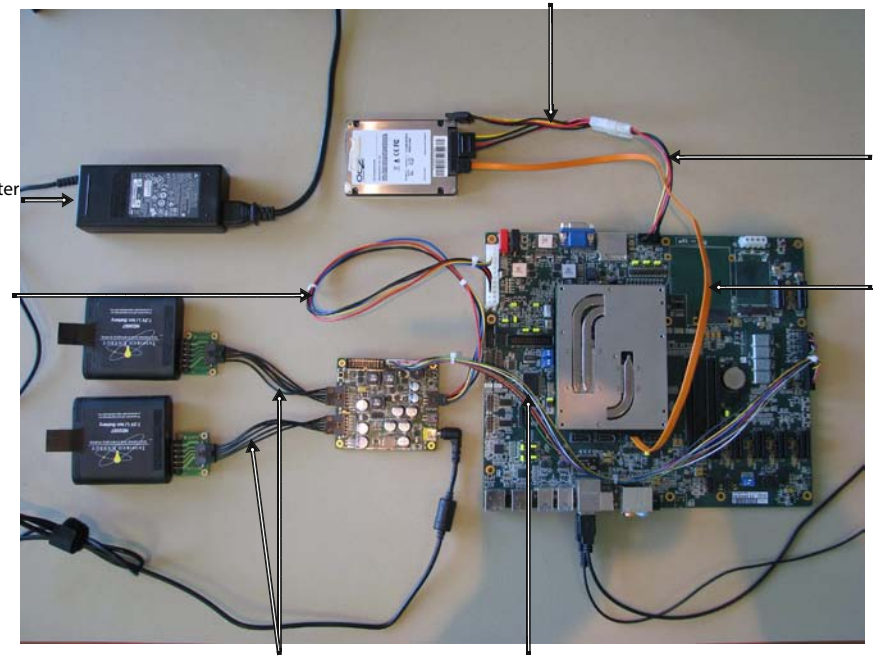

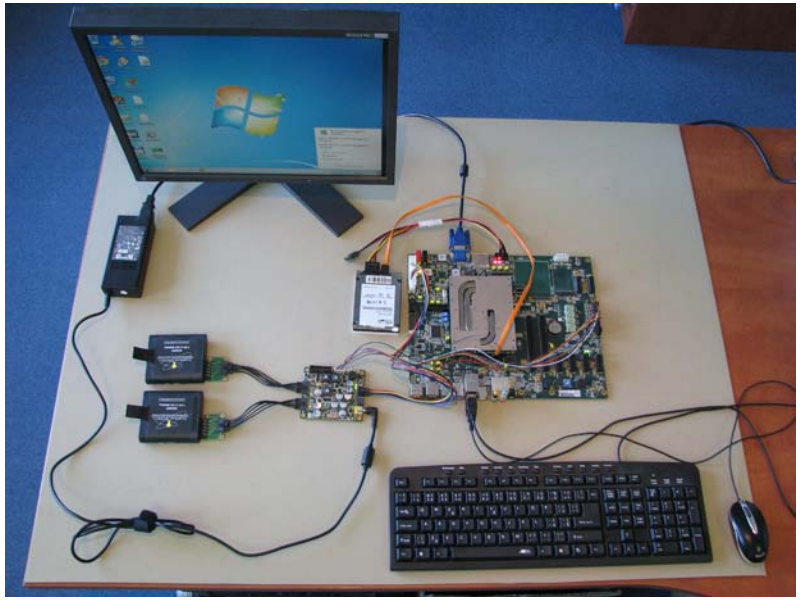

Cable Description

	TEVAL X.0 Evaluation Board	PN	Description	SBM3 Connector	Evaluation Board Connector
1	Data Control Cable	14000079-B	SBM3 xEVAL Control Cable	X4	X53
2	Power Cable	14000074-A	SBM3 ATX Power Cable	X7	X59
3	Battery 1	14000080-A	SBM3 Battery Power Cable	X8	
4	Battery 2	14000080-A	SBM3 Battery Power Cable	X9	
5	Input Power Cable	14000077-A	SBM3 Power Input Cable	X6	
6	Notebook AC-DC Adapter	10000079-B	90W, 19V@4.7A, ADP-90SB, Plug 5.5x2.5mm	X5	
8	SATA-HDD Power Cable	500001-A	KAB-SATA Power Cable		X72

Copyright © 2012 congatec AG

7.2.2 QSeven™ Electrical Connections

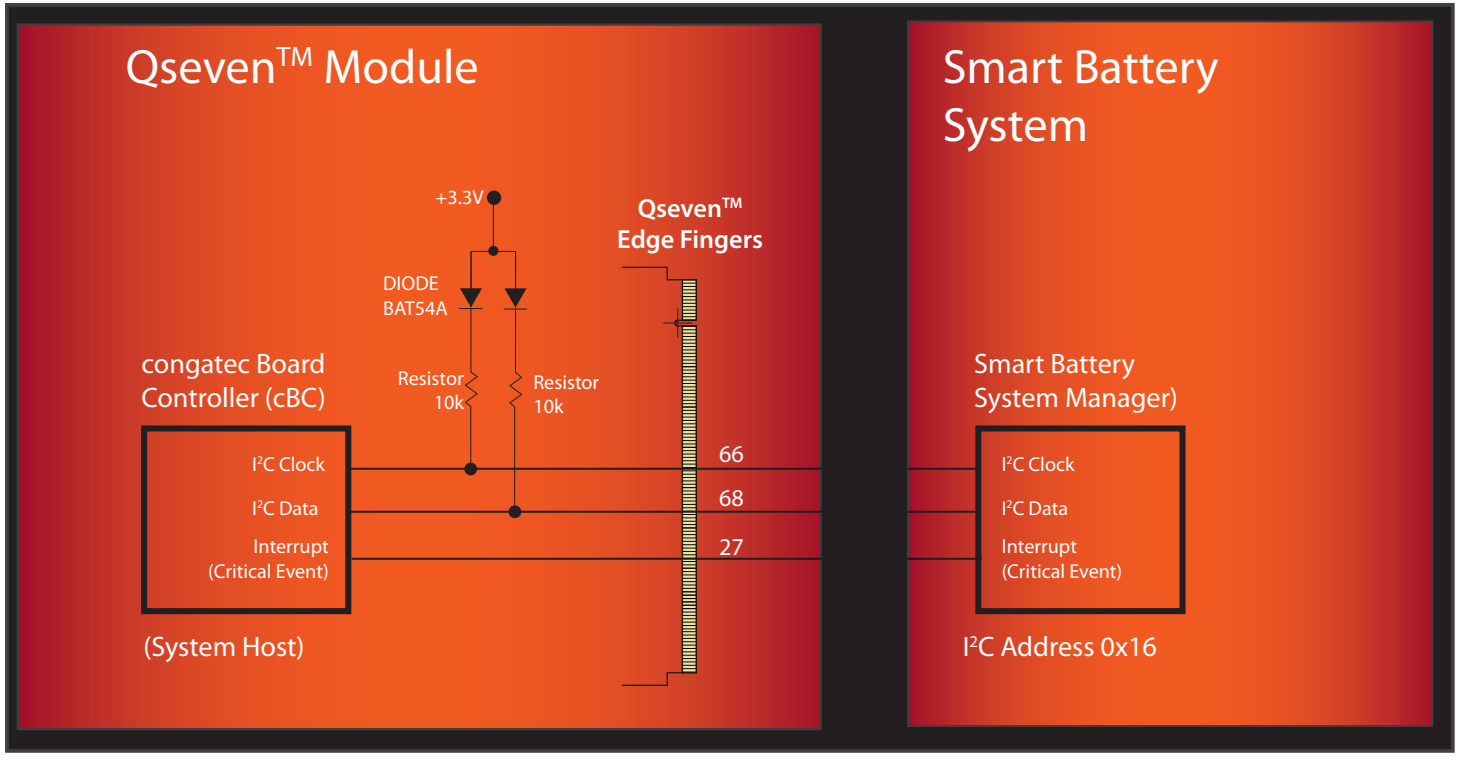

Table 10 Signal Descriptions (Qseven Connection)

Signal	Description	I/O	PU/PD	Comment
I2CLK	I2C bus clock	O 3.3V	*PU 4k7 3.3V	QSeven™ connector, pin 66
I2DAT	I2C bus data	I/O 3.3V	*PU 4k7 3.3V	QSeven™ connector, pin 68
BATLOW#	Critical Event Interrupt (battery low input)	I 3.3V	*PU 10k 3.3VSB	QSeven™ connector, pin 27

Note

** Refer to the corresponding QSeven™ module user's guide.*

7.2.2.1 conga-SBM³ connection with QMCB mini-carrier board

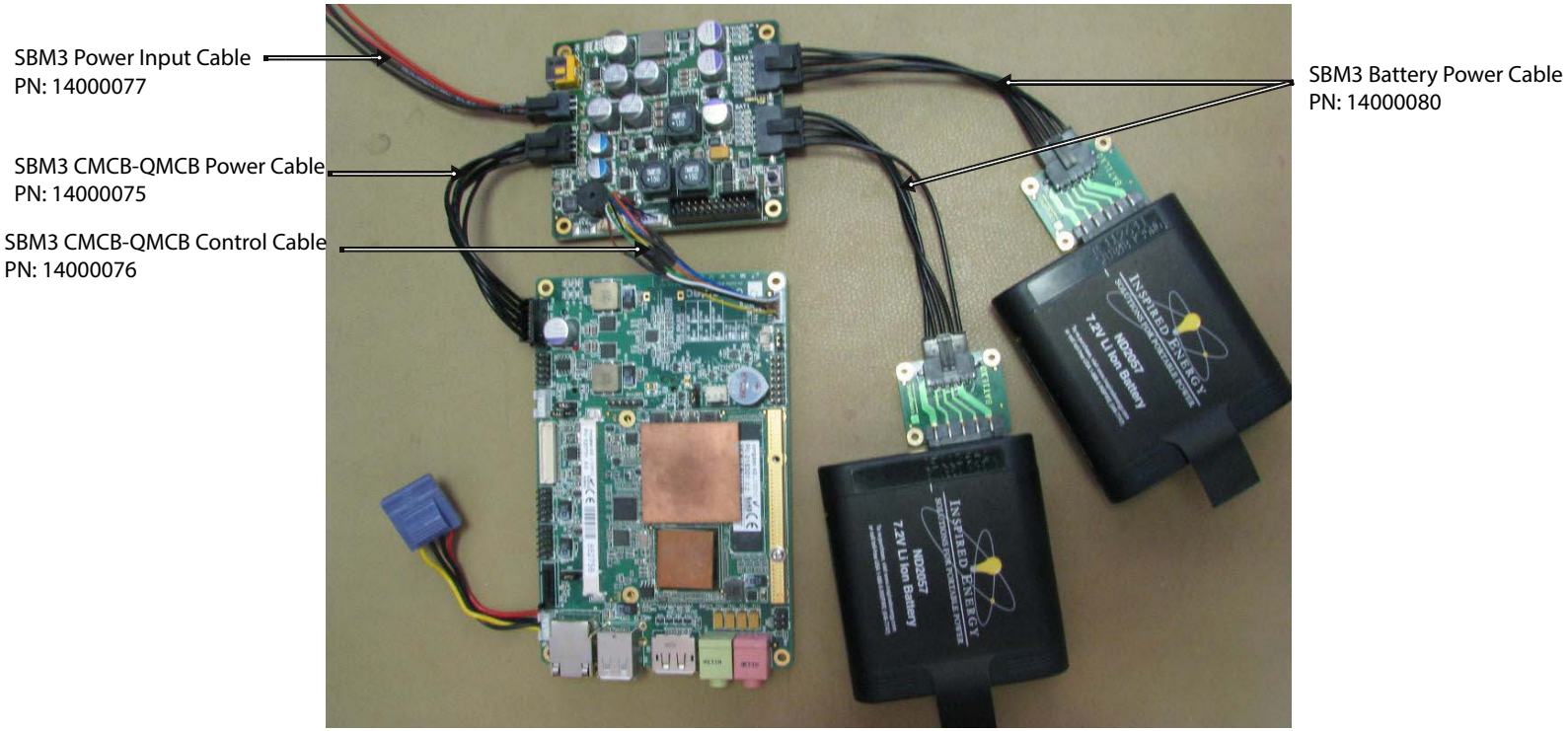

Cable Description

	QMCB A.0 Mini-carrier Board	PN	Description	SBM3 Connector	Evaluation Board Connector
1	Data Control Cable	14000076-A	SBM3 CMCB-QMCB Control Cable	X4	X20
2	Power Cable	14000075-A	SBM3 CMCB-QMCB Power Cable	X7	X19
3	Battery 1	14000080-A	SBM3 Battery Power Cable	X8	
4	Battery 2	14000080-A	SBM3 Battery Power Cable	X9	
5	Input Power Cable	14000077-A	SBM3 Power Input Cable	X6	
6	Notebook AC-DC Adapter	10000079-B	90W, 19V@4.7A, ADP-90SB, Plug 5.5x2.5mm	X5	
7	HDD Power Cable from SBM3	14000032-A	Cab-SATA Power Cable		X6

7.2.2.2 conga-SBM³ connection with QEVA Evaluation Board

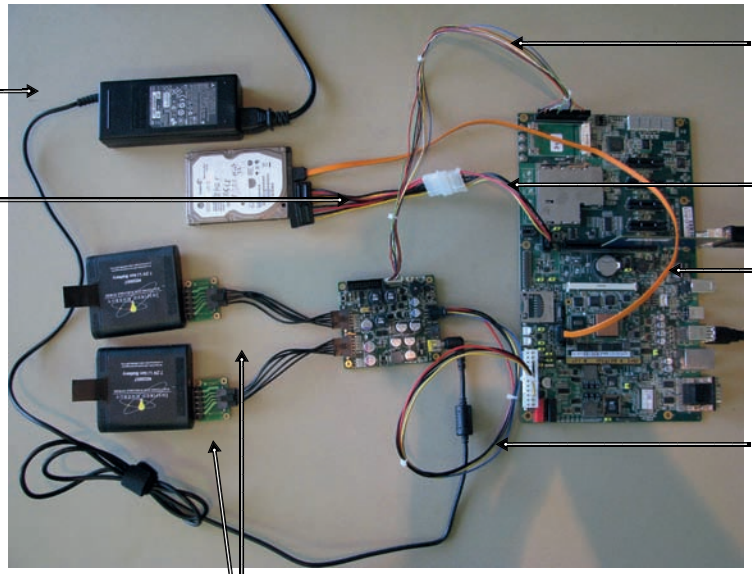

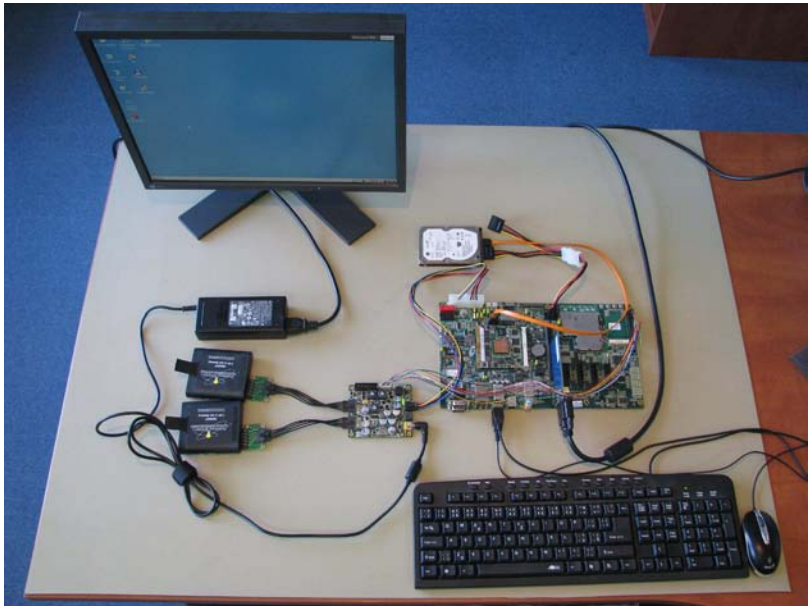

Cable Description

	QEVA A.2 Evaluation Board	PN	Description	SBM3 Connector	Evaluation Board Connector
1	Data Control Cable	14000079-B	SBM3 xEVAL Control Cable	X4	CN35
2	Power Cable	14000074-A	SBM3 ATX Power Cable	X7	CN38
3	Battery 1	14000080-A	SBM3 Battery Power Cable	X8	
4	Battery 2	14000080-A	SBM3 Battery Power Cable	X9	
5	Input Power Cable	14000077-A	SBM3 Power Input Cable	X6	
6	Notebook AC-DC Adapter	10000079-B	90W, 19V@4.7A, ADP-90SB, Plug 5.5x2.5mm	X5	
7	HDD Power Cable from SBM3	14000081-A	SBM3 Disc Power Cable for CEVA and PEVA		CN15
8	SATA-HDD Power Cable	500001-A	KAB-SATA Power Cable		

7.3 SBSM Control Register

The conga-SBM³ must cache the values of the Smart Battery status and control registers defined by the ‘Smart Battery Data Specification Rev. 1.1’. These control registers must be located in the SBSM at the addresses 0x00 to 0x3F.

In order to distinguish between the different batteries that can be connected to the system, the congatec solution uses the control registers defined by the SBSM (‘Smart Battery System Manager Specification Rev. 1.0, Release Candidate b’). These control registers must be located (different from the definition of the SBSM Specification) above the cached registers of the Smart Battery starting at register address 0x40.

The table below lists all defined registers. The column ‘Access’ shows how the system host (cBC) accesses the individual registers. An entry ‘r’ or ‘r/w’ means that the implementation of the particular register is mandatory in order for the congatec battery management solution to function properly. An empty entry means that the particular register is optional and may be implemented by the SBSM for completeness.

7.3.1 Control Registers

Table 11 Control Register description

Function	Address	Access	Data type / units	Format
ManufacturerAccess	0x00	R	Battery manufacturer specific	Word
RemainingCapacityAlarm	0x01	R/W	mAh / unsigned integer	Word
RemainingTimeAlarm	0x02	R/W	Minutes / unsigned integer	Word
BatteryMode	0x03	R	Flags / bit map	Word
AtRate	0x04	R	mA / signed integer	Word
AtRateTimeToFull	0x05	R	Minutes / unsigned integer	Word
AtRateTimeToEmpty	0x06	R	Minutes / unsigned integer	Word
AtRateOK	0x07	R	TRUE or FALSE / boolean	Word
Temperature	0x08	R	0.1°K / unsigned integer	Word

Copyright © 2012 congatec AG

Function	Address	Access	Data type / units	Format
Voltage	0x09	R	mV / unsigned integer	Word
Current	0x0A	R	mA / signed integer	Word
AverageCurrent	0x0B	R	mA / signed integer	Word
MaxError	0x0C	R	Percent / unsigned integer	Word
RelativeStateOfCharge	0x0D	R	Percent / unsigned integer	Word
AbsoluteStateOfCharge	0x0E	R	Percent / unsigned integer	Word
RemainingCapacity	0x0F	R	mAh / unsigned integer	Word
FullChargeCapacity	0x10	R	mAh / unsigned integer	Word
RunTimeToEmpty	0x11	R	Minutes / unsigned integer	Word
AverageTimeToEmpty	0x12	R	Minutes / unsigned integer	Word
AverageTimeToFull	0x13	R	Minutes / unsigned integer	Word
ChargingCurrent	0x14	R	mA / unsigned integer	Word
ChargingVoltage	0x15	R	mV / unsigned integer	Word
BatteryStatus	0x17	R	Flags / bit map	Word
CycleCount	0x16	R	Count / unsigned integer	Word
DesignCapacity	0x18	R	mAh or 10mWh / unsigned integer	Word
DesignVoltage	0x19	R	mV / unsigned integer	Word
SpecificationInfo	0x1A	R	Packed data / bit map	Word
ManufactureDate	0x1B	R	Packed date / unsigned integer	Word
SerialNumber	0x1C	R	Number / unsigned integer	Word
Reserved	0x1D - 0x1F			
ManufacturerName	0x20	R	Character string	Word
DeviceName	0x21	R	Character string	Word
DeviceChemistry	0x22	R	Character string	Word
ManufacturerData	0x23	R	Battery manufacturer specific	Word
Reserved	0x25 - 0x2E			
Reserved	0x2F			
Reserved	0x30 - 0x3B			
Firmware Revision	0x3C	R/W	Unsigned integer, congatec specific	Word
OptionalMfgCfgReg1	0x3D	R/W	Bit flags	Word
OptionalMfgCfgReg2	0x3E	R/W	Reserved / Custom usage	Word
OptionalMfgCfgReg3	0x3F	R	Reserved / Custom usage	Word
Reserved	0x40			
BatterySystemState	0x41	R/W	Packed data / bit map	Word
BatterySystemStateCont	0x42	R	Packed data / bit map	Word
Reserved	0x43			
BatterySystemInfo	0x44	R	Packed data / bit map	Word
Reserved	0x45 - 0xFF			

Note

The registers highlighted in the table above are essential for ACPI BIOS Control Methods. The orange highlighted registers are used by

ACPI _BIF method to obtain the static battery information and the green highlighted registers by ACPI _BST method to determine the current status of the battery.

7.3.2 OptionalMfgCfgReg2 Register (0x3E)

Table 12 Optional Register

Optional R/W register for custom configuration of the battery kit.

Bit Number	Bit Name	Default Value	Description
0	SND_EN	1	Sound Enabled 0 - disabled 1 - enabled
1	DUAL MODE	0	Battery dual charge/discharge mode
2-15		x	Reserved

8 Industry Specifications

The list below provides links to industry specifications that apply to congatec AG modules.

Specification	Link
Smart Battery Charger Specification Rev 1.1	http://www.sbs-forum.org/specs/
Smart Battery Data Specification Rev 1.1	
Smart Battery Selector Specification Rev 1.1	
Smart Battery System Manager Specification Rev 1.0	
ACPI	http://www.acpi.info/
System Management Bus Specification	http://smbus.org/specs/
Design guidelines from congatec	http://www.congatec.com
Design Guide for COM Express	
Design Guide for XTX	
Design Guide for Qseven	
Design Guide for Battery System	
Specification-congatec Battery Management Interface	
CMSIS - Cortex Microcontroller Software Interface Standard	http://www.arm.com/products/processors/cortex-m/cortex-microcontroller-software-interface-standard.php

OCEAN CHIPS
Океан Электроники
Поставка электронных компонентов

Компания «Океан Электроники» предлагает заключение долгосрочных отношений при поставках импортных электронных компонентов на взаимовыгодных условиях!

Наши преимущества:

- Поставка оригинальных импортных электронных компонентов напрямую с производств Америки, Европы и Азии, а так же с крупнейших складов мира;
- Широкая линейка поставок активных и пассивных импортных электронных компонентов (более 30 млн. наименований);
- Поставка сложных, дефицитных, либо снятых с производства позиций;
- Оперативные сроки поставки под заказ (от 5 рабочих дней);
- Экспресс доставка в любую точку России;
- Помощь Конструкторского Отдела и консультации квалифицированных инженеров;
- Техническая поддержка проекта, помощь в подборе аналогов, поставка прототипов;
- Поставка электронных компонентов под контролем ВП;
- Система менеджмента качества сертифицирована по Международному стандарту ISO 9001;
- При необходимости вся продукция военного и аэрокосмического назначения проходит испытания и сертификацию в лаборатории (по согласованию с заказчиком);
- Поставка специализированных компонентов военного и аэрокосмического уровня качества (Xilinx, Altera, Analog Devices, Intersil, Interpoint, Microsemi, Actel, Aeroflex, Peregrine, VPT, Syfer, Eurofarad, Texas Instruments, MS Kennedy, Miteq, Cobham, E2V, MA-COM, Hittite, Mini-Circuits, General Dynamics и др.);

Компания «Океан Электроники» является официальным дистрибьютором и эксклюзивным представителем в России одного из крупнейших производителей разъемов военного и аэрокосмического назначения **«JONHON»**, а так же официальным дистрибьютором и эксклюзивным представителем в России производителя высокотехнологичных и надежных решений для передачи СВЧ сигналов **«FORSTAR»**.

AVIC JONHON

«JONHON» (основан в 1970 г.)

Разъемы специального, военного и аэрокосмического назначения:

(Применяются в военной, авиационной, аэрокосмической, морской, железнодорожной, горно- и нефтедобывающей отраслях промышленности)

«FORSTAR» (основан в 1998 г.)

ВЧ соединители, коаксиальные кабели, кабельные сборки и микроволновые компоненты:

(Применяются в телекоммуникациях гражданского и специального назначения, в средствах связи, РЛС, а так же военной, авиационной и аэрокосмической отраслях промышленности).

FORSTAR®

Телефон: 8 (812) 309-75-97 (многоканальный)
Факс: 8 (812) 320-03-32
Электронная почта: ocean@oceanchips.ru
Web: http://oceanchips.ru/
Адрес: 198099, г. Санкт-Петербург, ул. Калинина, д. 2, корп. 4, лит. А